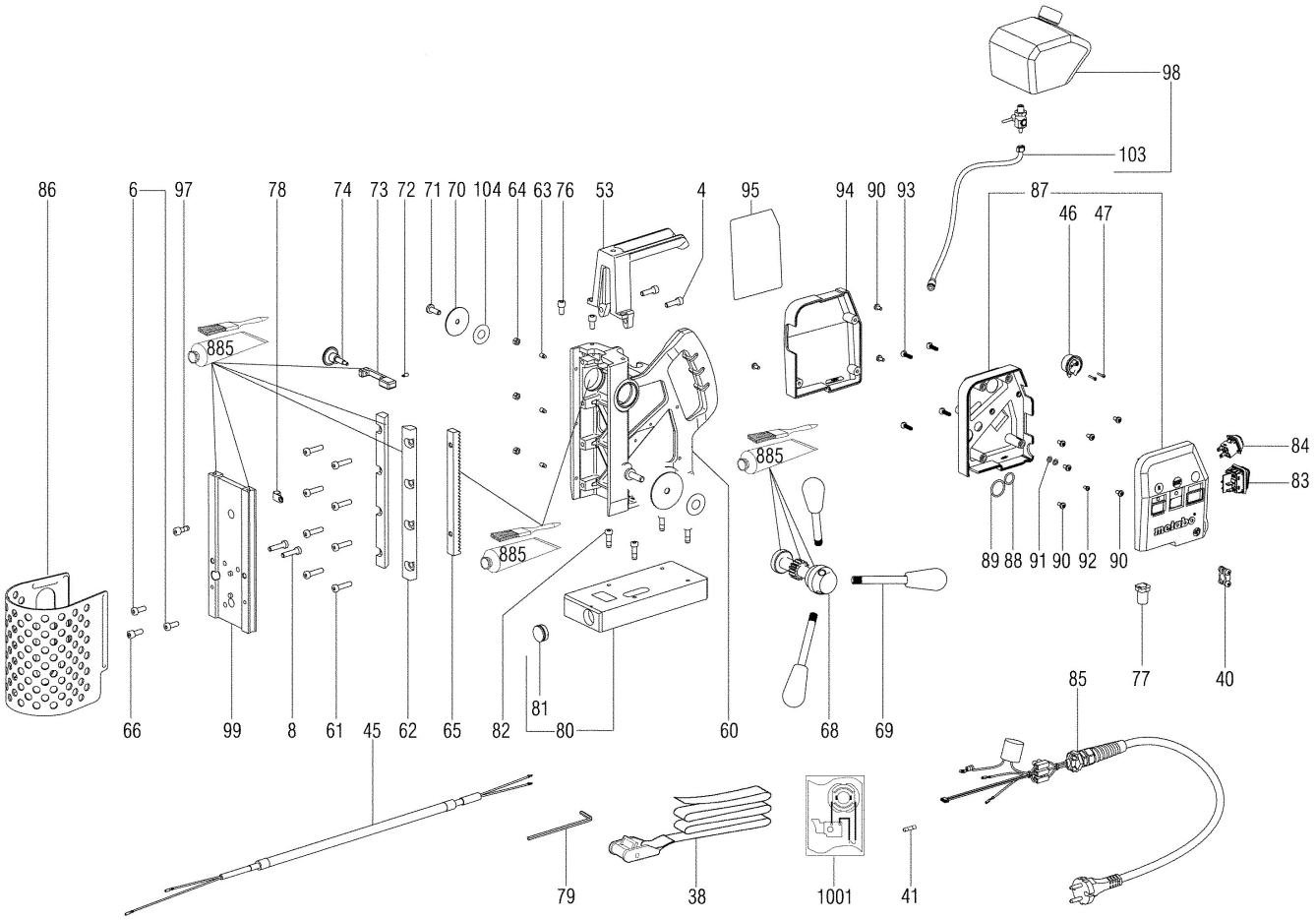
98
103
86
6
97
78
74
73
72
71
70
104
64
63
76
53
4
95
94
90
93
87
46
47
885
84
83
89
88
91
90
92
90
885
885
81
66
99
8
61
45
62
65
82
80
60
68
69
85
77
40
79
38
1001
41

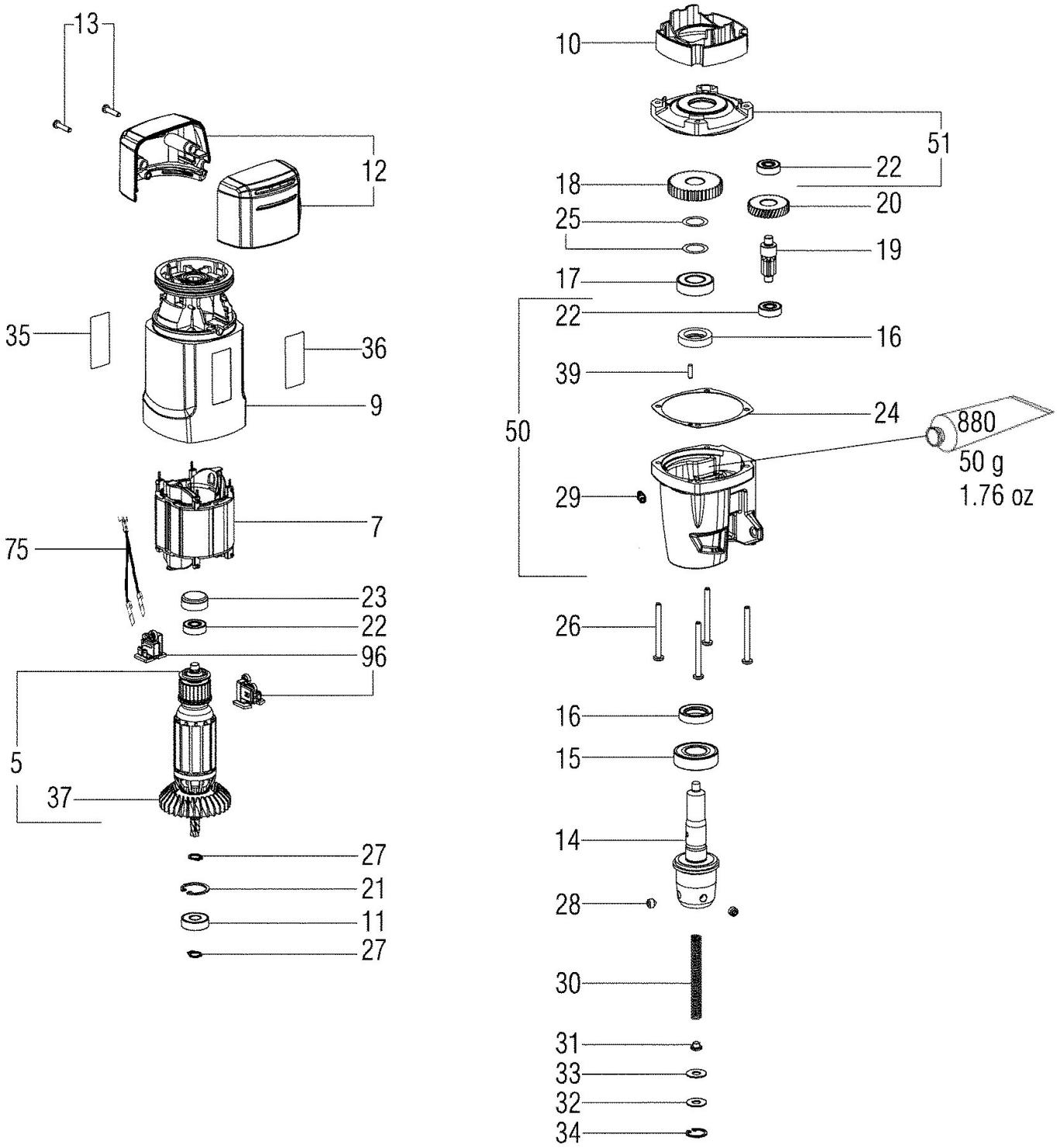
13
12
35
36
9
7
75
23
22
96
5
37
27
21
11
27
10
51
22
18
20
25
19
17
22
16
39
24
880
50 g
1.76 oz
50
29
26
16
15
14
28
30
31
33
32
34

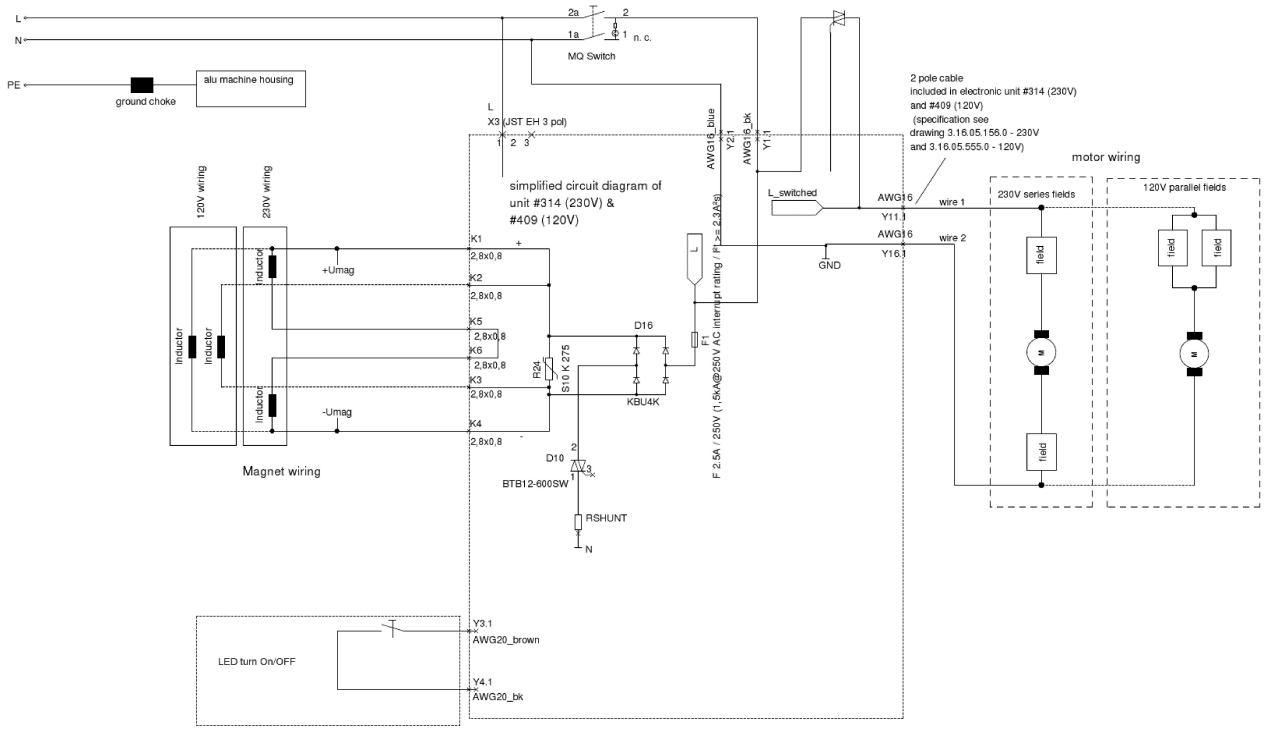
L
N
PE
ground choke
alu machine housing
2a
2
1a
1
n. c.
MQ Switch
L
X3 (JST EH 3 pol)
1 2 3
AWG16_blue
Y2.1
AWG16_bk
Y1.1
2 pole cable
included in electronic unit #314 (230V)
and #409 (120V)
(specification see
drawing 3.16.05.156.0 - 230V
and 3.16.05.555.0 - 120V)
motor wiring
simplified circuit diagram of
unit #314 (230V) &
#409 (120V)
L_switched
AWG16
Y11.1
wire 1
AWG16
Y16.1
wire 2
GND
230V series fields
120V parallel fields
field
M
120V wiring
230V wiring
Inductor
+Umag
-Umag
K1
K2
K5
K6
K3
K4
2,8x0,8
R24
S10 K 275
D16
KBU4K
D10
BTB12-600SW
RSHUNT
N
F 2.5A / 250V (1,5kA@250V AC interrupt rating / Pt >= 2,3A²s)
Magnet wiring
LED turn On/OFF
Y3.1
AWG20_brown
Y4.1
AWG20_bk