0 601 044 739
Issue / Stand 13-10-22
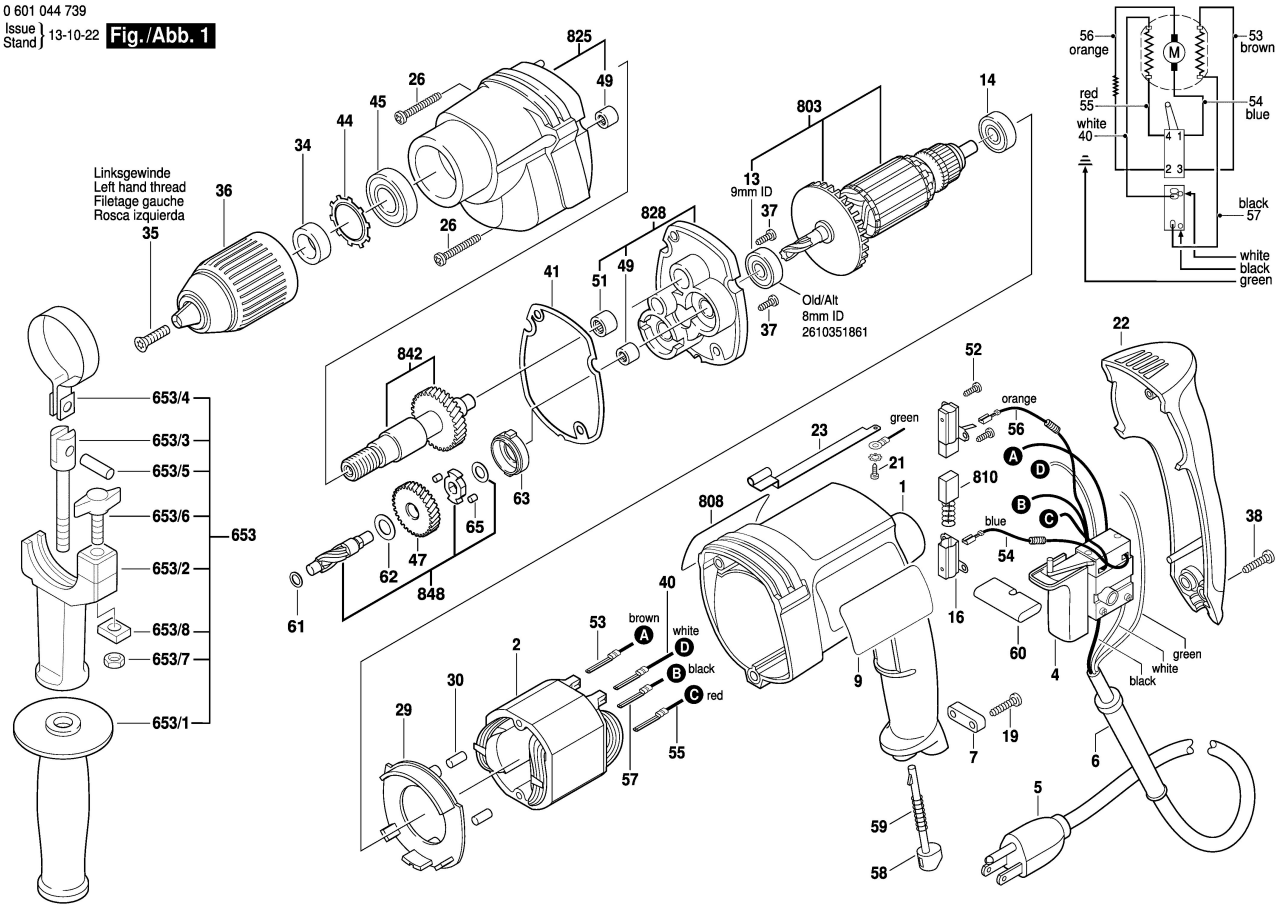
Fig./Abb. 1