0 601 132 703
Issue / Stand 13-04-18
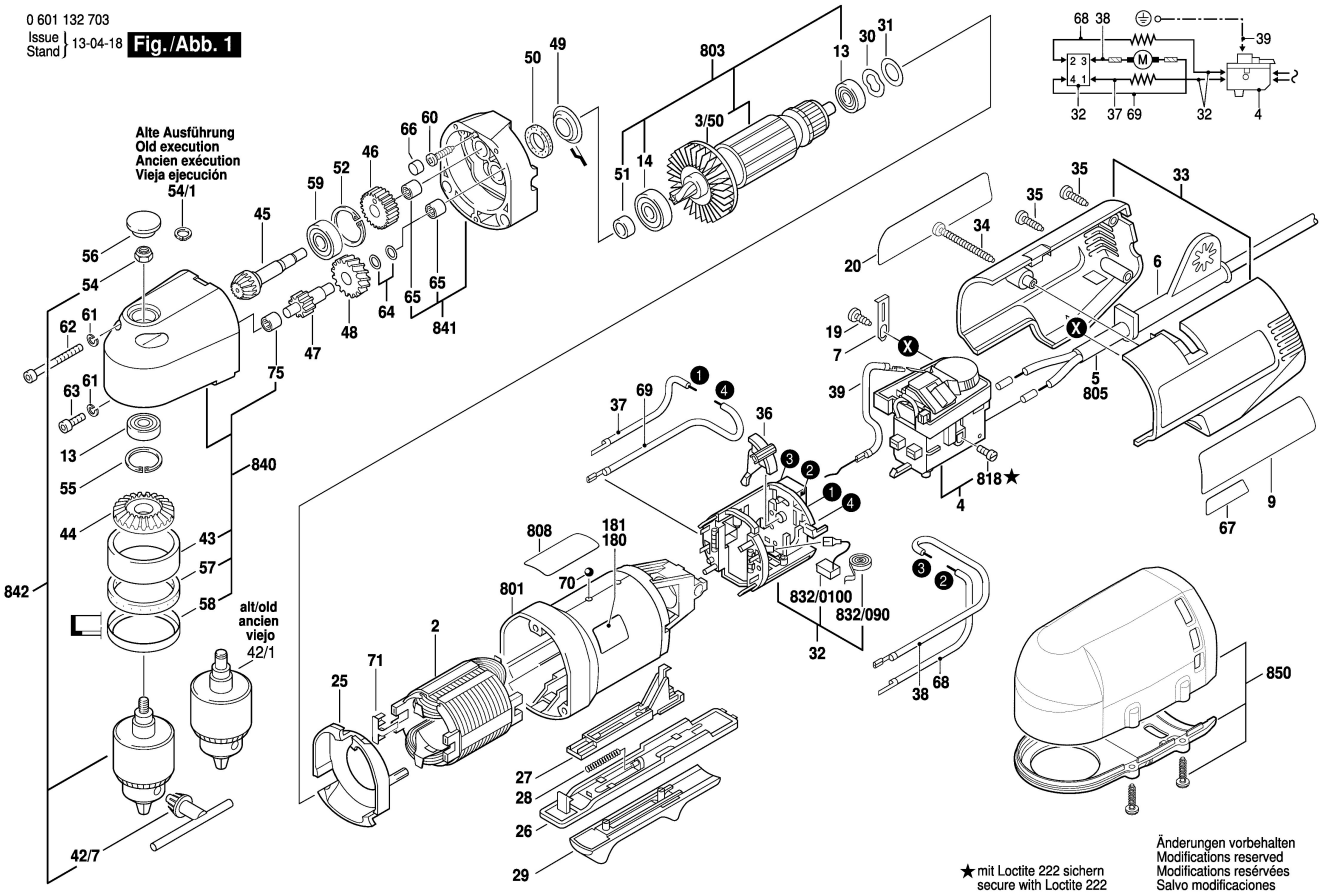
Fig./Abb. 1