0 601 136 003
Stand ~~97-12~~
Issue 98-10-08
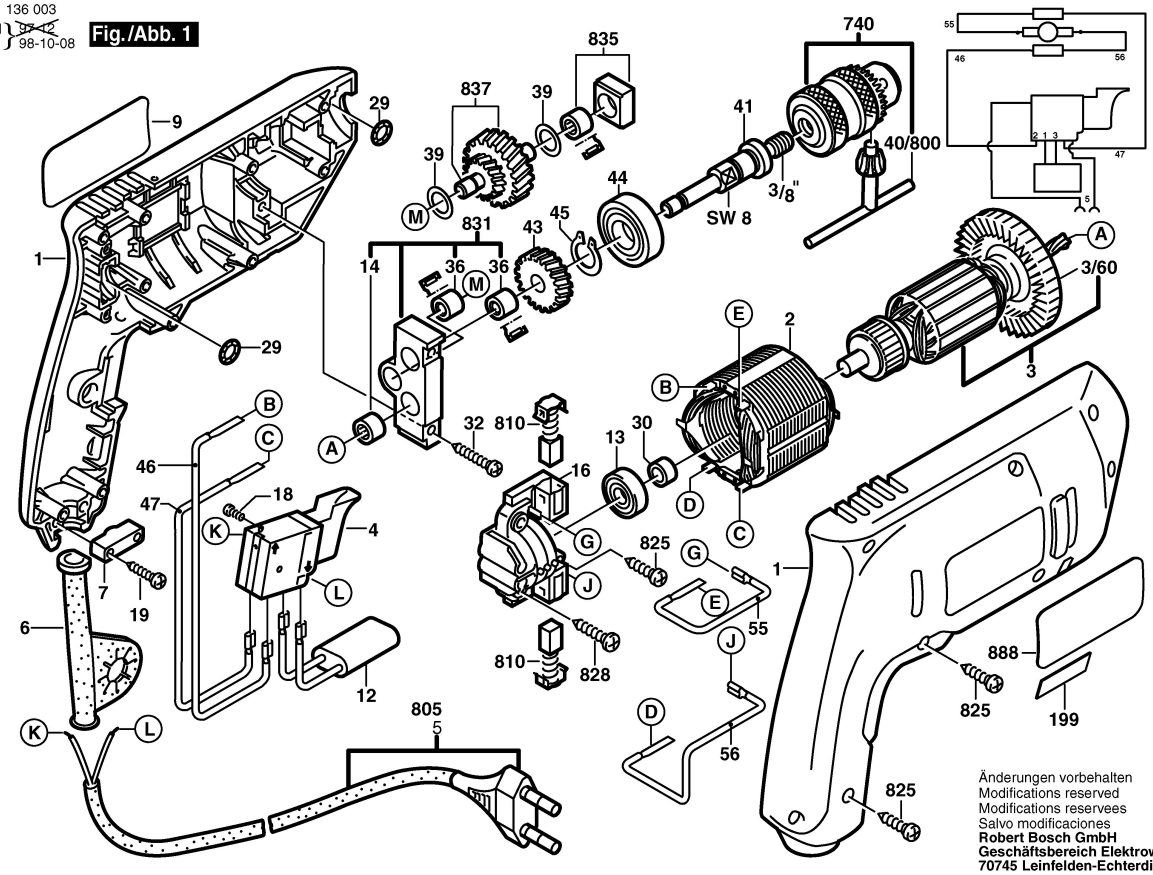
Fig./Abb. 1