0 601 163 734

Stand / Issue 83-06
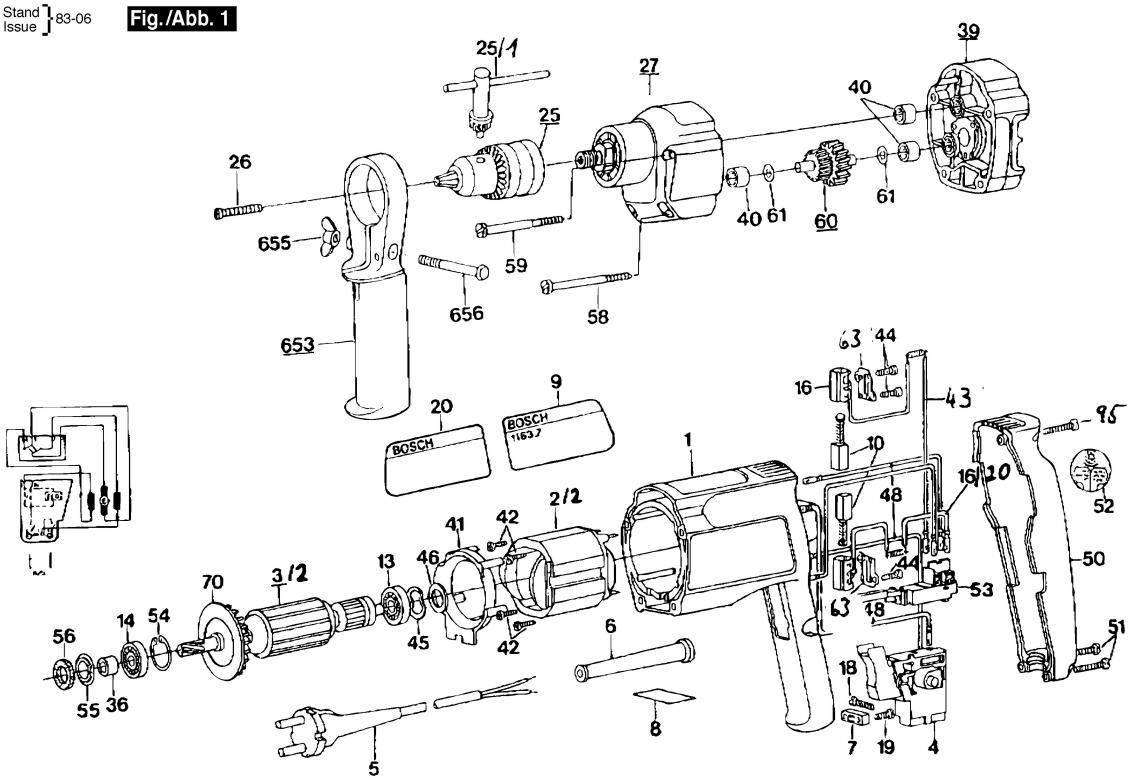
Fig./Abb. 1