0 601 375 006
Stand } ~~08-01~~
Issue } 14-07-22

Fig. /Abb. 1

Gerad - Verzahnung

● Vor Demontage des Ankers Kohlebürsten 5mm zurückziehen !

Before the armature is removed the carbon brushes must be withdrawn by at least 5mm !

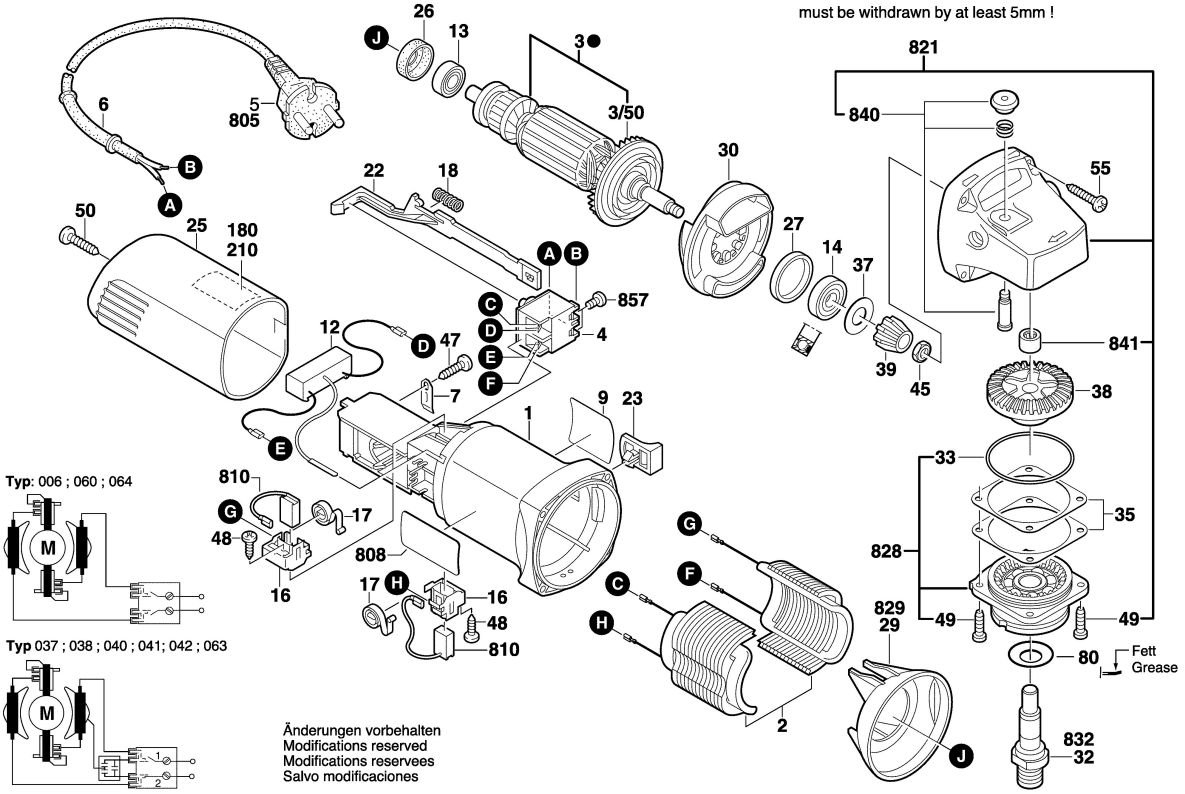

0 601 375 006
Stand } ~~03-07~~
Issue } 07-08-09

Fig. /Abb. 2

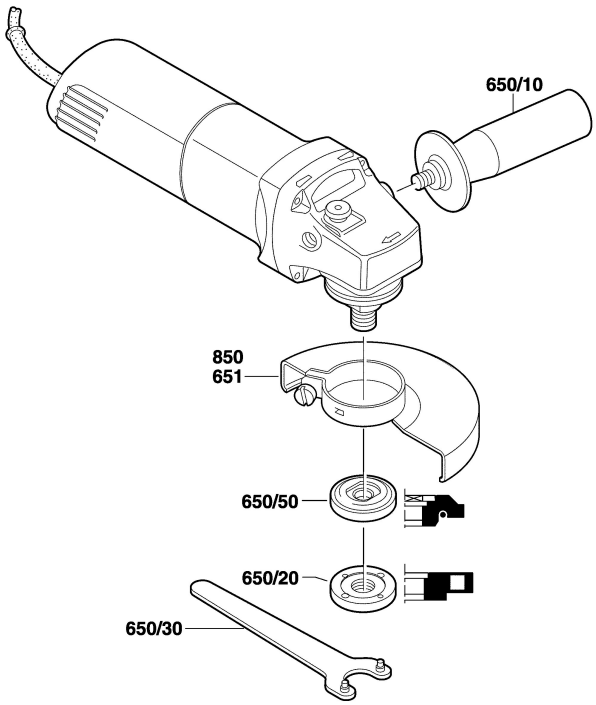

Änderungen vorbehalten
Modifications reserved
Modifications reservees
Salvo modificaciones