0 601 421 703

Issue / Stand 03-12-10
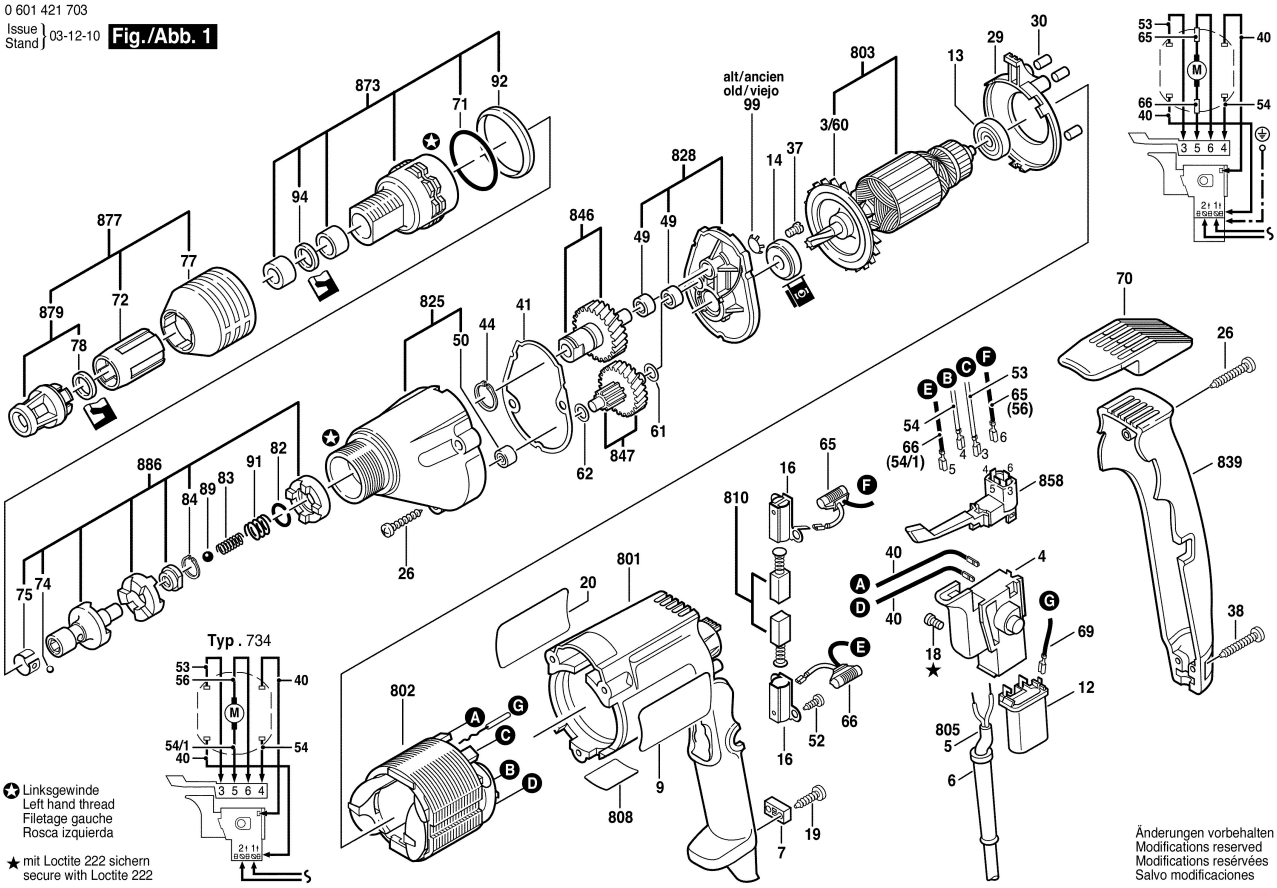
Fig./Abb. 1