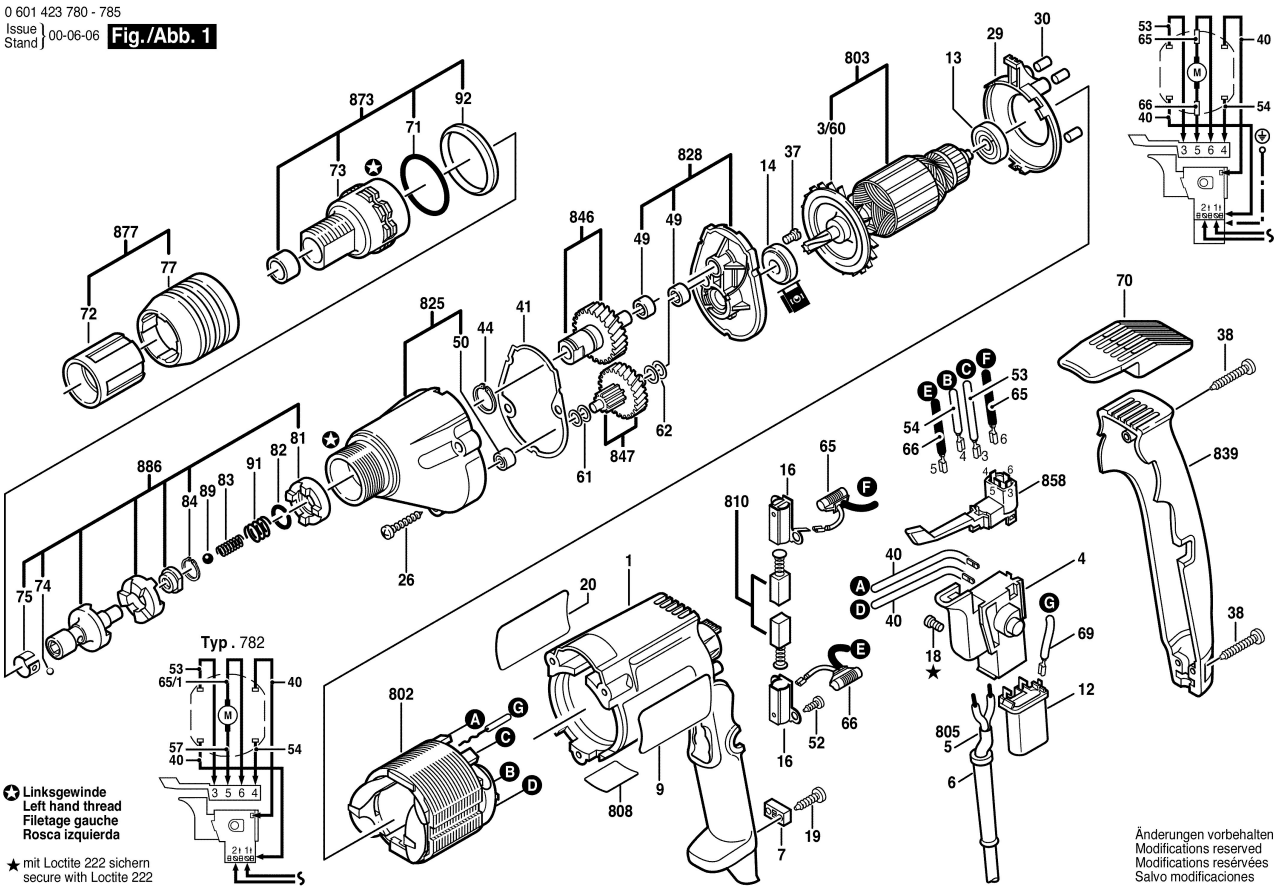0 601 423 780 - 785
Issue / Stand } 00-06-06 **Fig./Abb. 1**