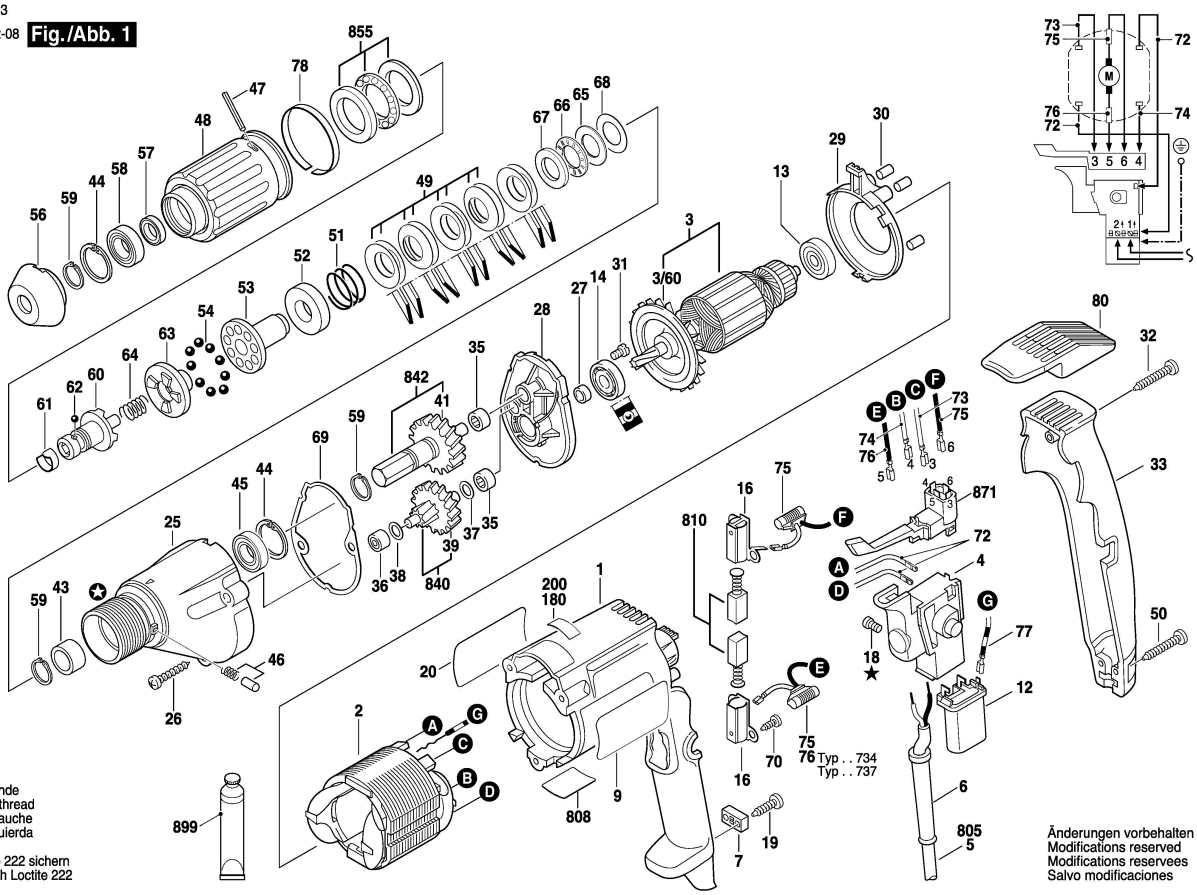0 601 426 703
Issue Stand } 11-02-08 **Fig./Abb. 1**