0 601 594 103
Stand } ~~D9-10~~
Issue } 13-01-30
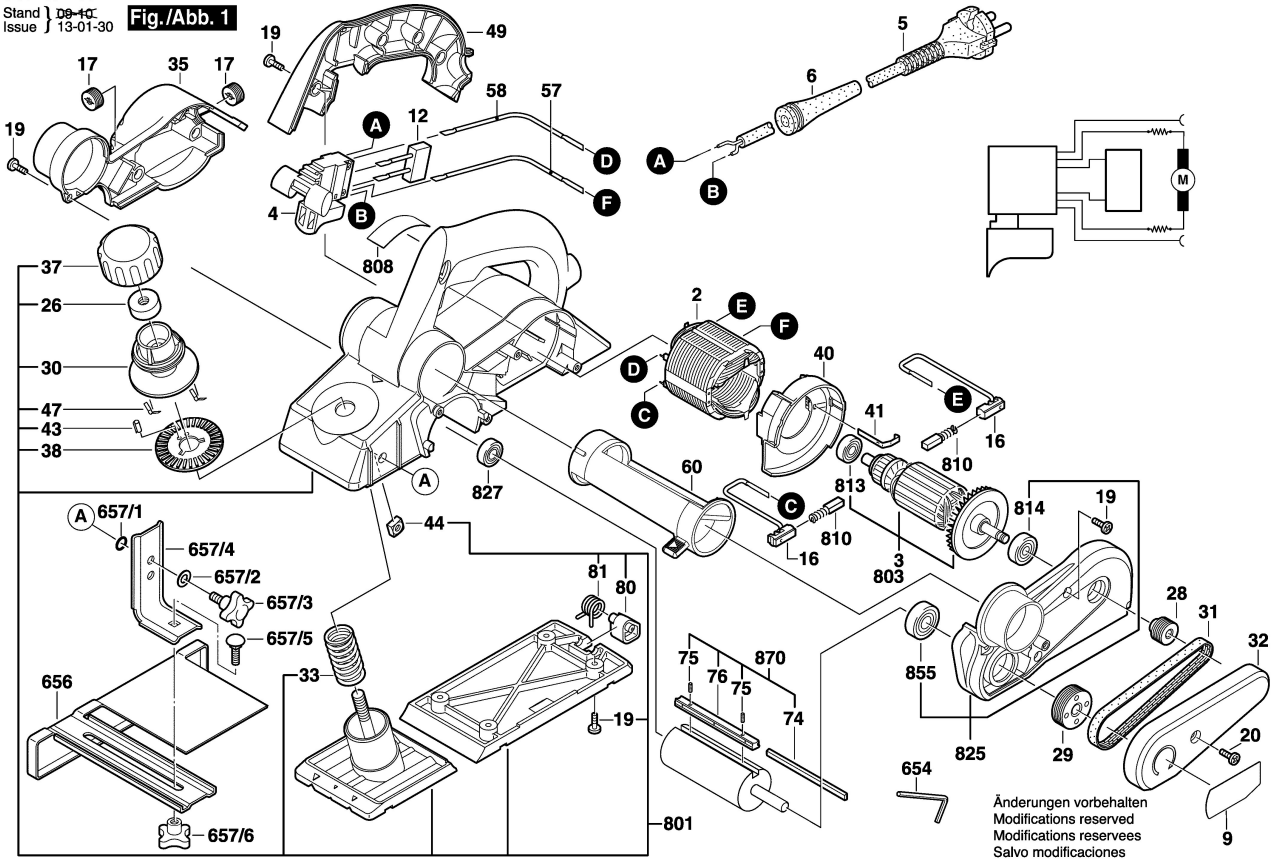
Fig./Abb. 1