0 601 614 603
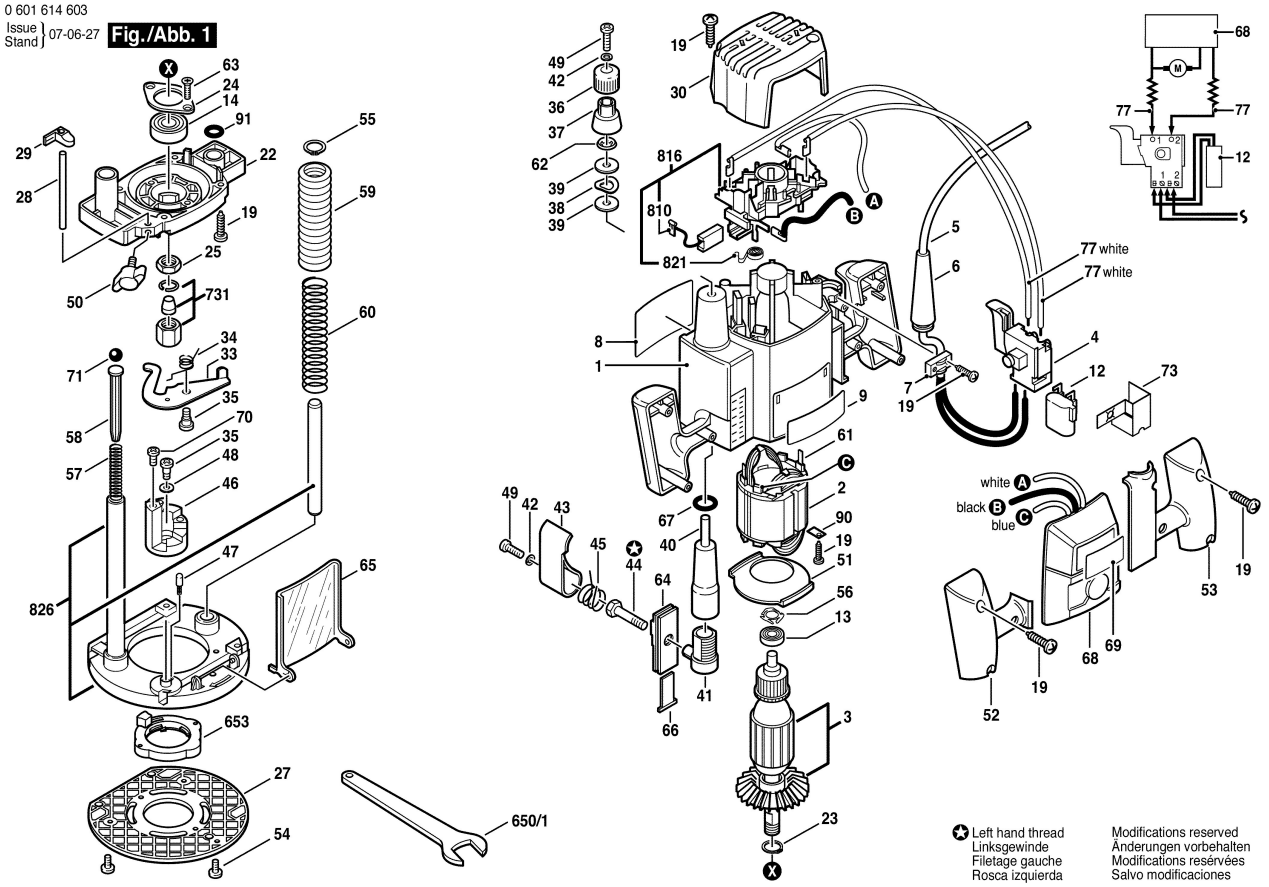
Issue Stand } 07-06-27 **Fig./Abb. 1**