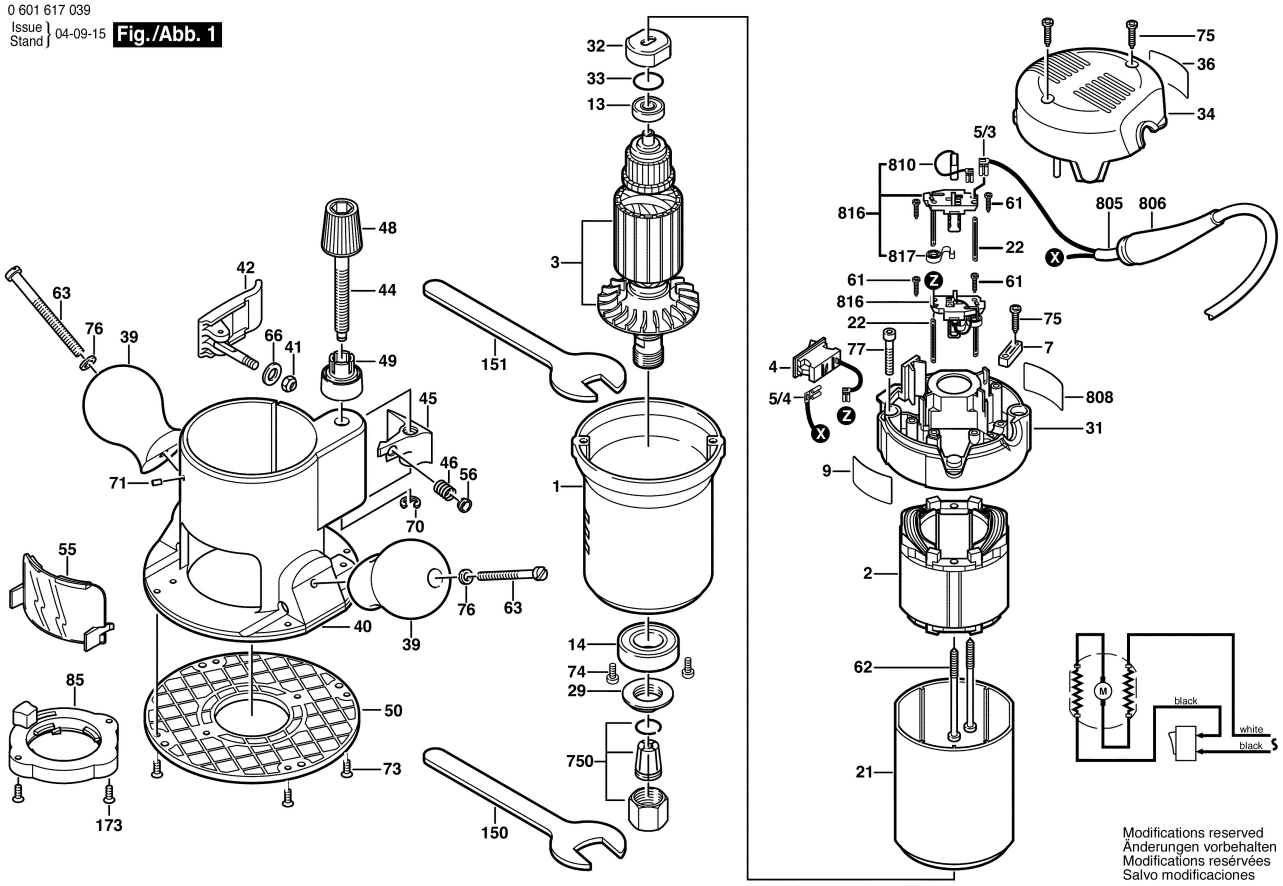0 601 617 039
Issue / Stand } 04-09-15 **Fig./Abb. 1**