Typ 0 601 **921** 56 . = **GSR 12VES**

Stand ~~95-07~~
Issue 95-08.02

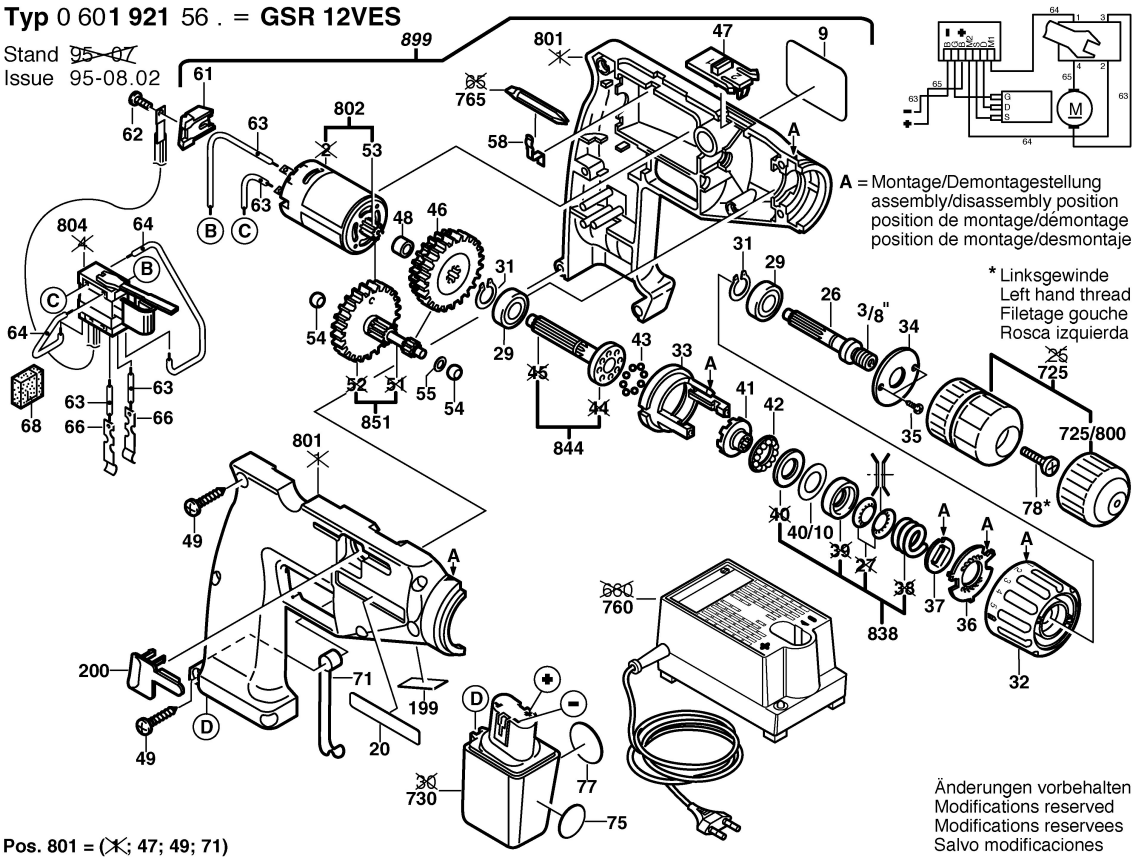

Pos. 801 = (✳; 47; 49; 71)