0 601 927 563

Stand } ~~05-07~~
Issue } 09-02-09
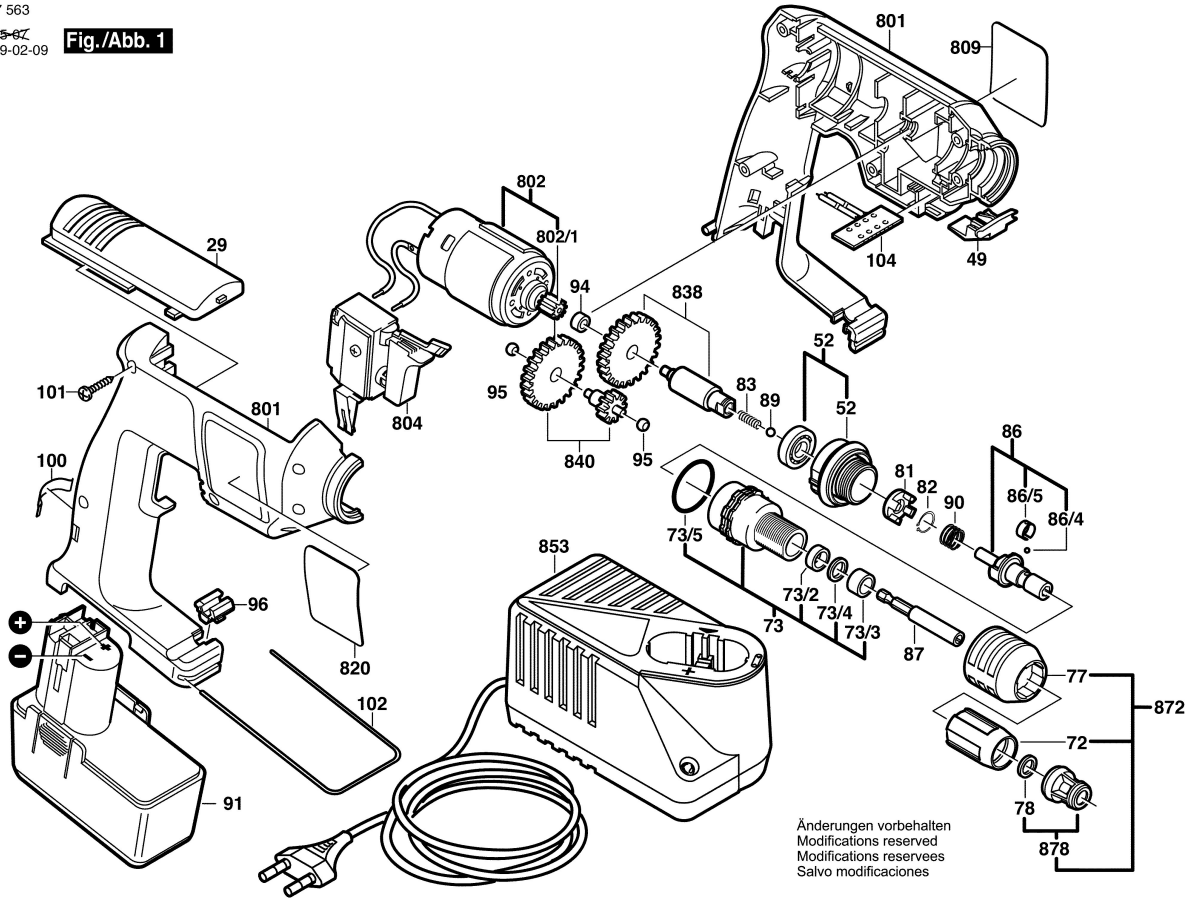
Fig./Abb. 1