0 601 933 371
Stand } ~~97-06~~
Issue } 99-08-18
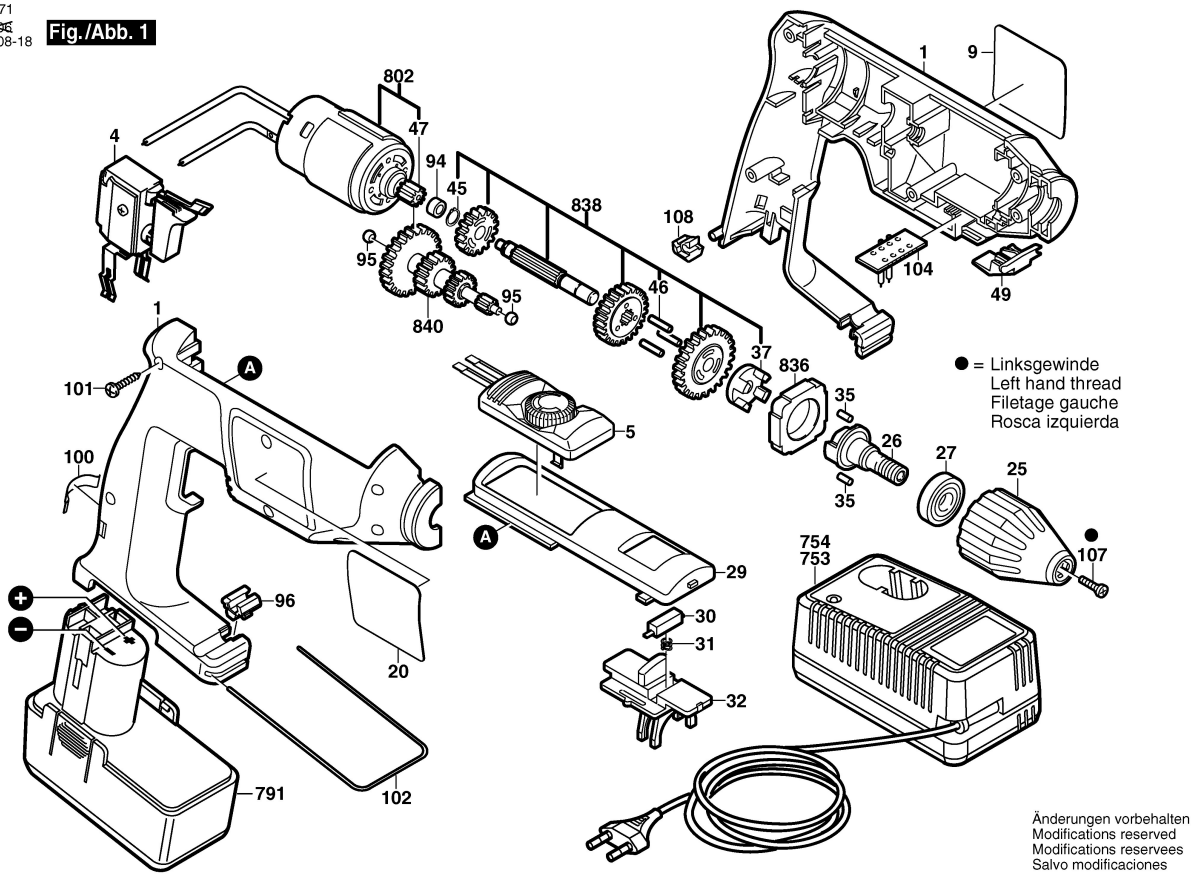
Fig./Abb. 1