0 601 934 760
Stand ~~98-02~~
Issue 98-10-08
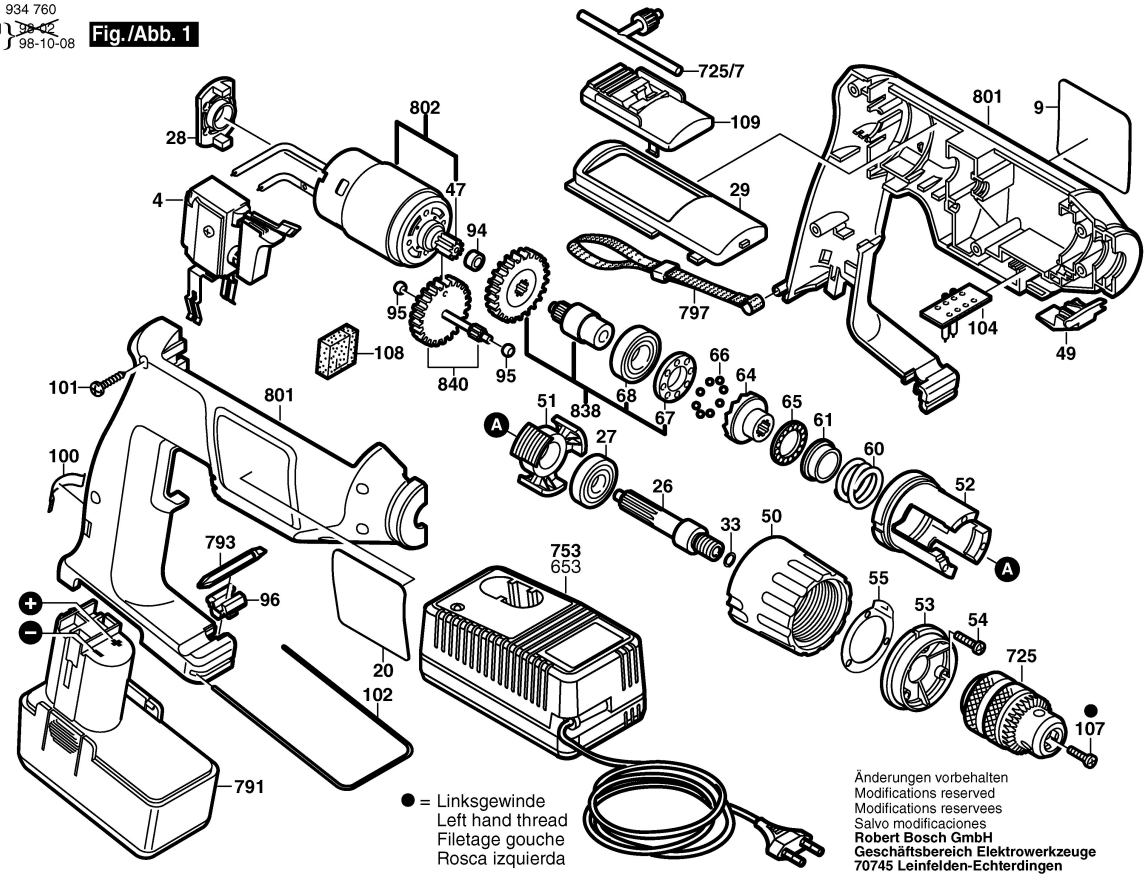
Fig./Abb. 1