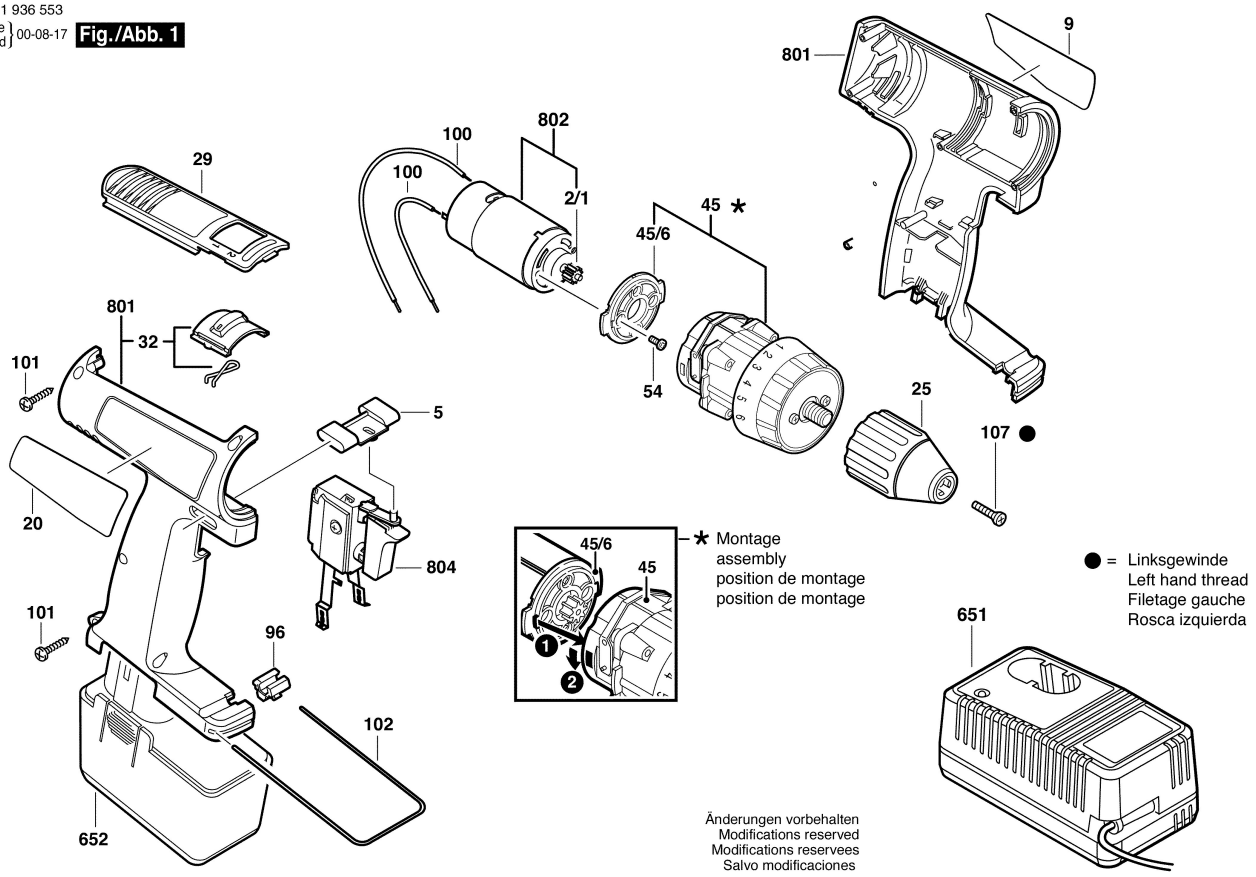0 601 936 553
Issue Stand 00-08-17 **Fig./Abb. 1**