0 601 936 603

Stand ~~08-05~~
Issue 02-08-19

Fig./Abb. 1

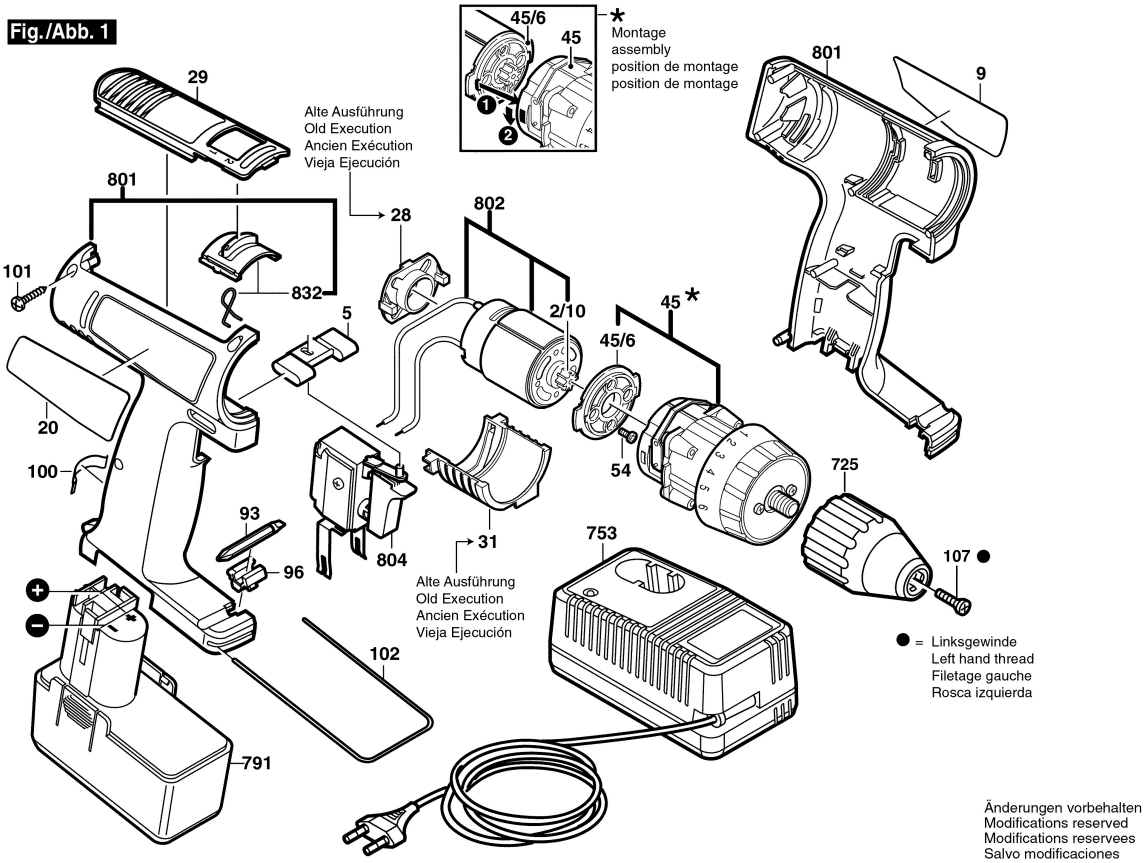

Änderungen vorbehalten
Modifications reserved
Modifications reservees
Salvo modificaciones