0 601 936 703

Stand ~~979-01~~
Issue 02-08-15

Fig./Abb. 1

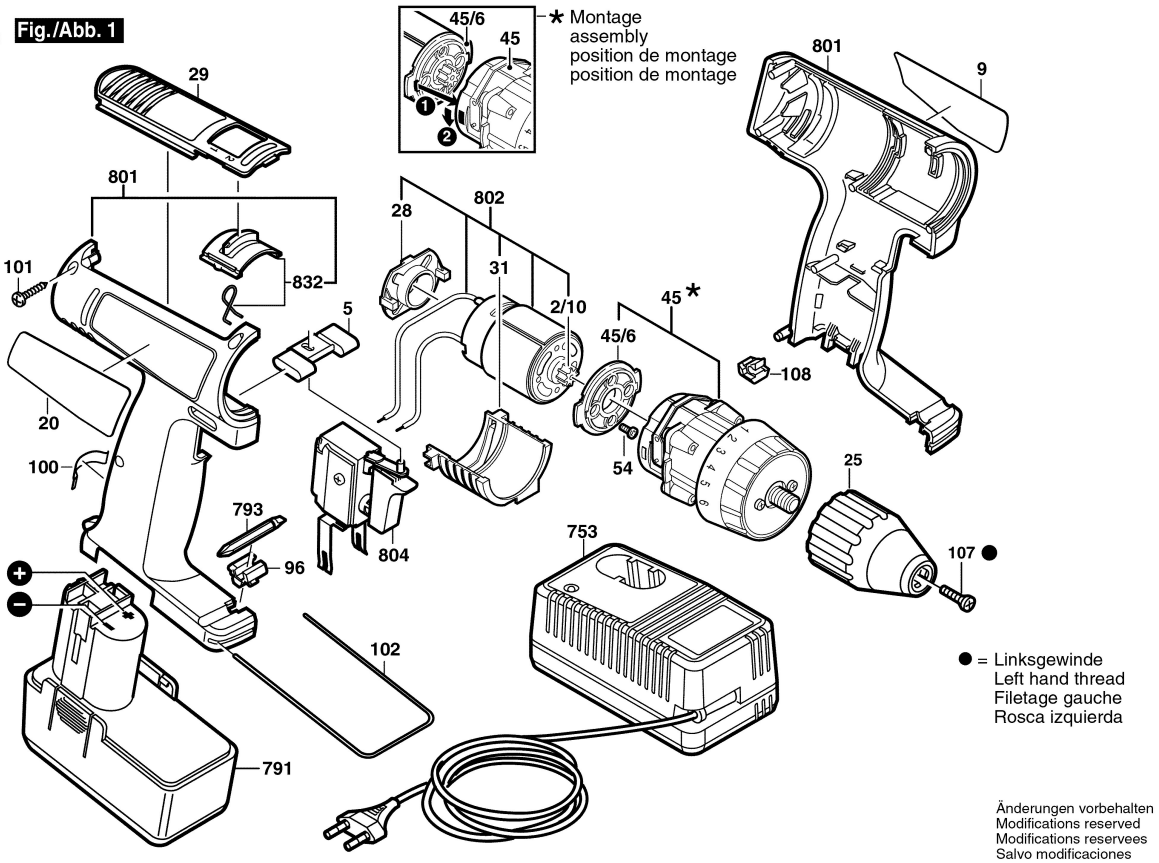

Änderungen vorbehalten
Modifications reserved
Modifications reservees
Salvo modificaciones