0 603 272 145

Stand ~~97-11~~
Issue 99-07-19

Fig./Abb. 1

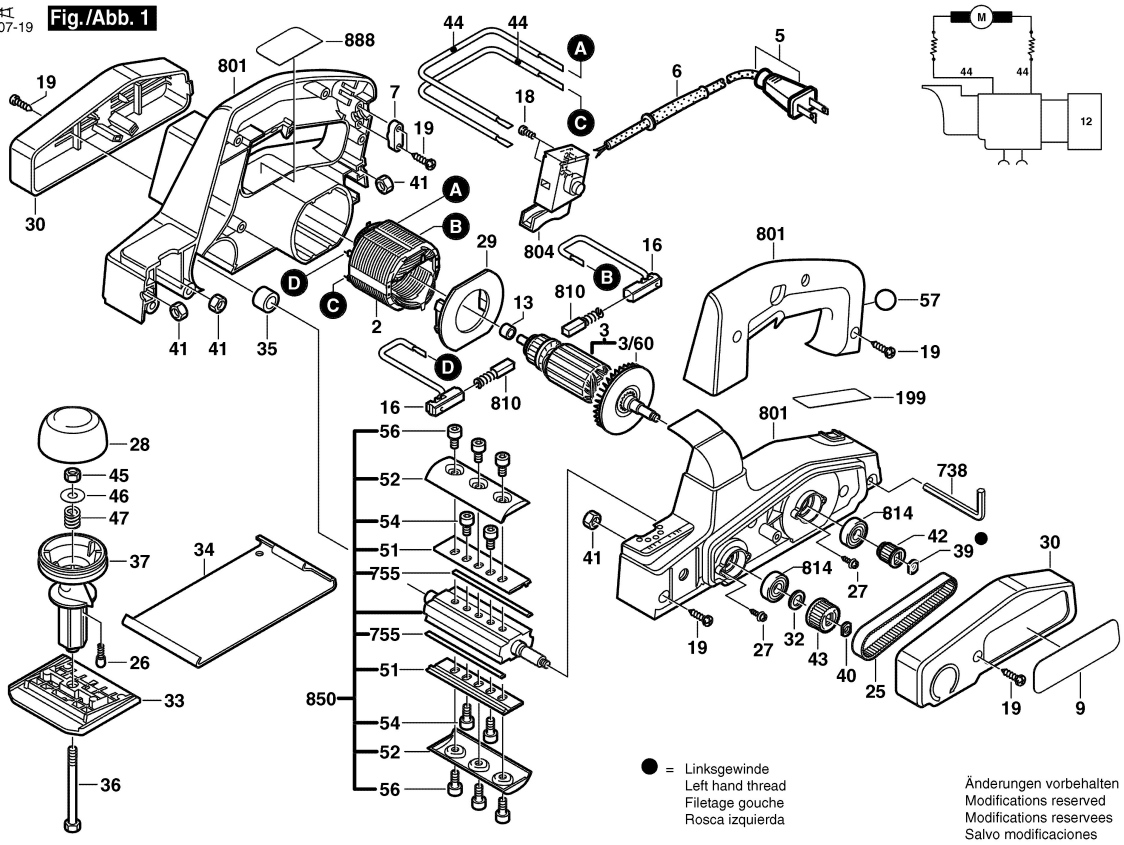

● = Linksgewinde
Left hand thread
Filetage gouche
Rosca izquierda

Änderungen vorbehalten
Modifications reserved
Modifications reservees
Salvo modificaciones