0603 935 503

Stand / Issue ~~97-07~~ 00-01-15

Fig./Abb. 1

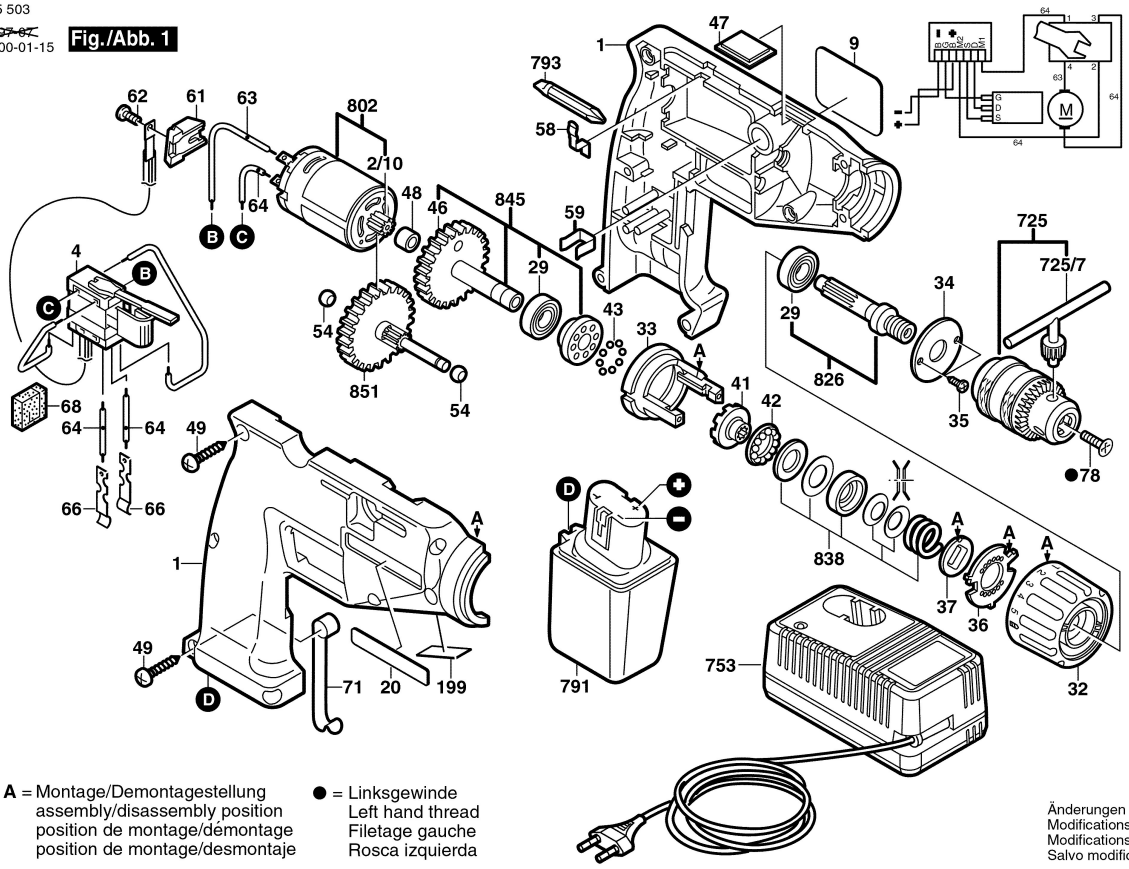

A = Montage/Demontagestellung
assembly/disassembly position
position de montage/démontage
position de montage/desmontaje

● = Linksgewinde
Left hand thread
Filetage gauche
Rosca izquierda

Änderungen vorbehalten
Modifications reserved
Modifications reservees
Salvo modificaciones