0 603 937 665

Stand / Issue ~~10-04~~ 01-05-22

Fig./Abb. 1

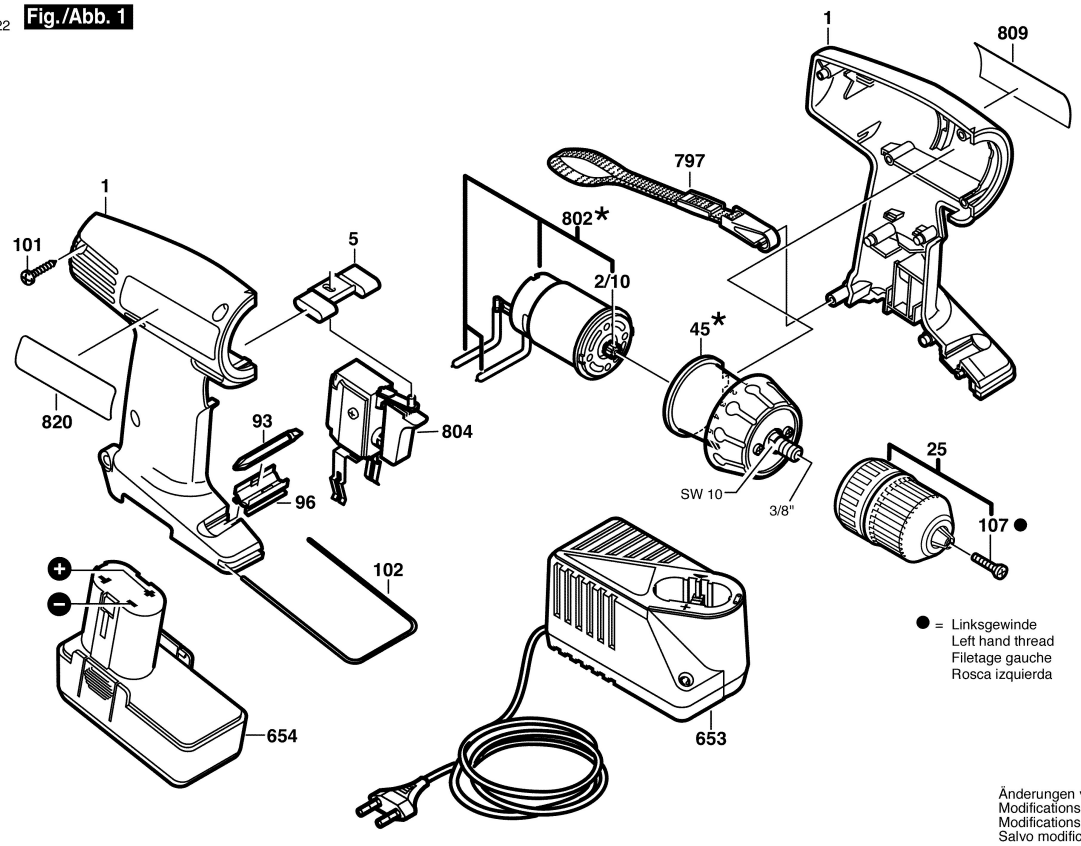

Änderungen vorbehalten
Modifications reserved
Modifications reservees
Salvo modificaciones