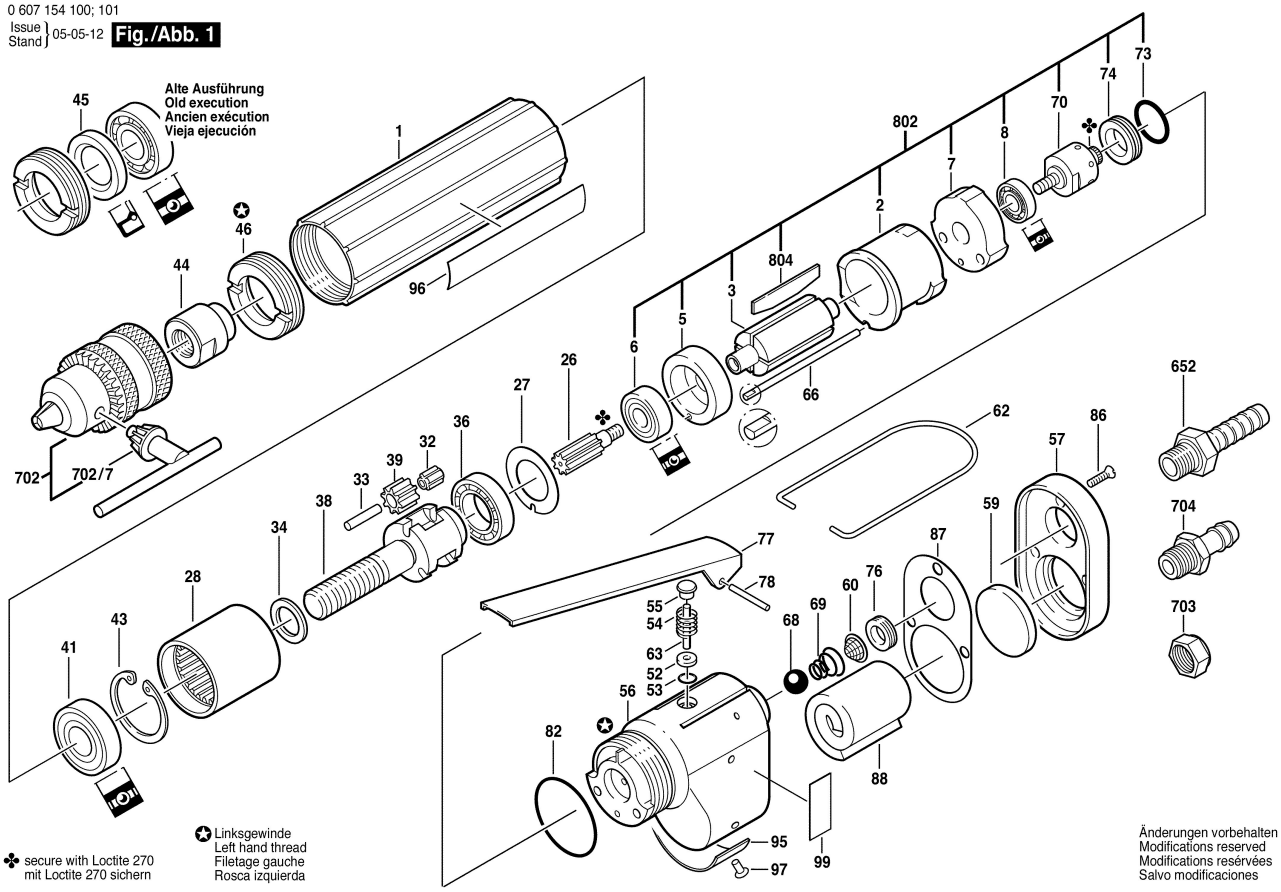0 607 154 100; 101
Issue / Stand } 05-05-12 **Fig./Abb. 1**