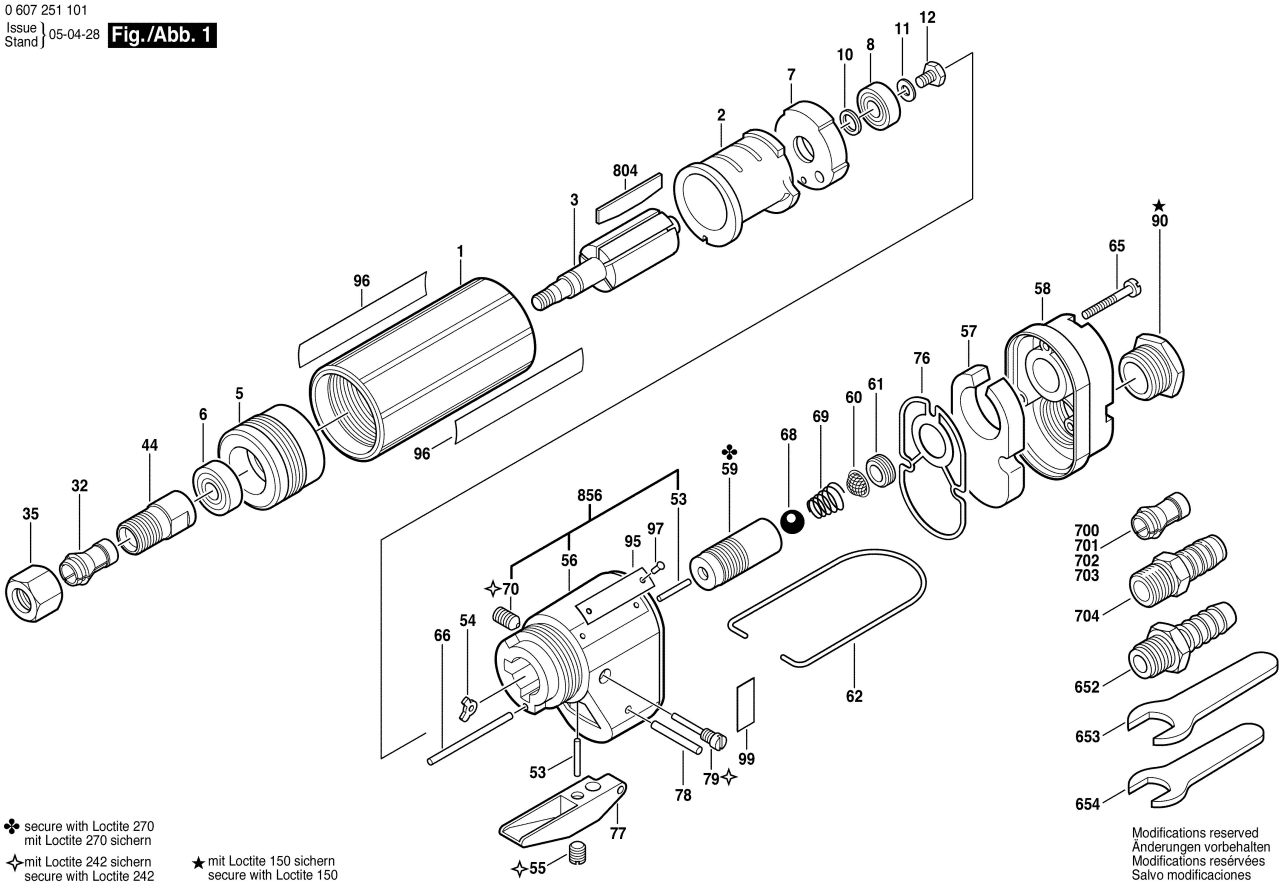0 607 251 101
Issue / Stand } 05-04-28 **Fig./Abb. 1**