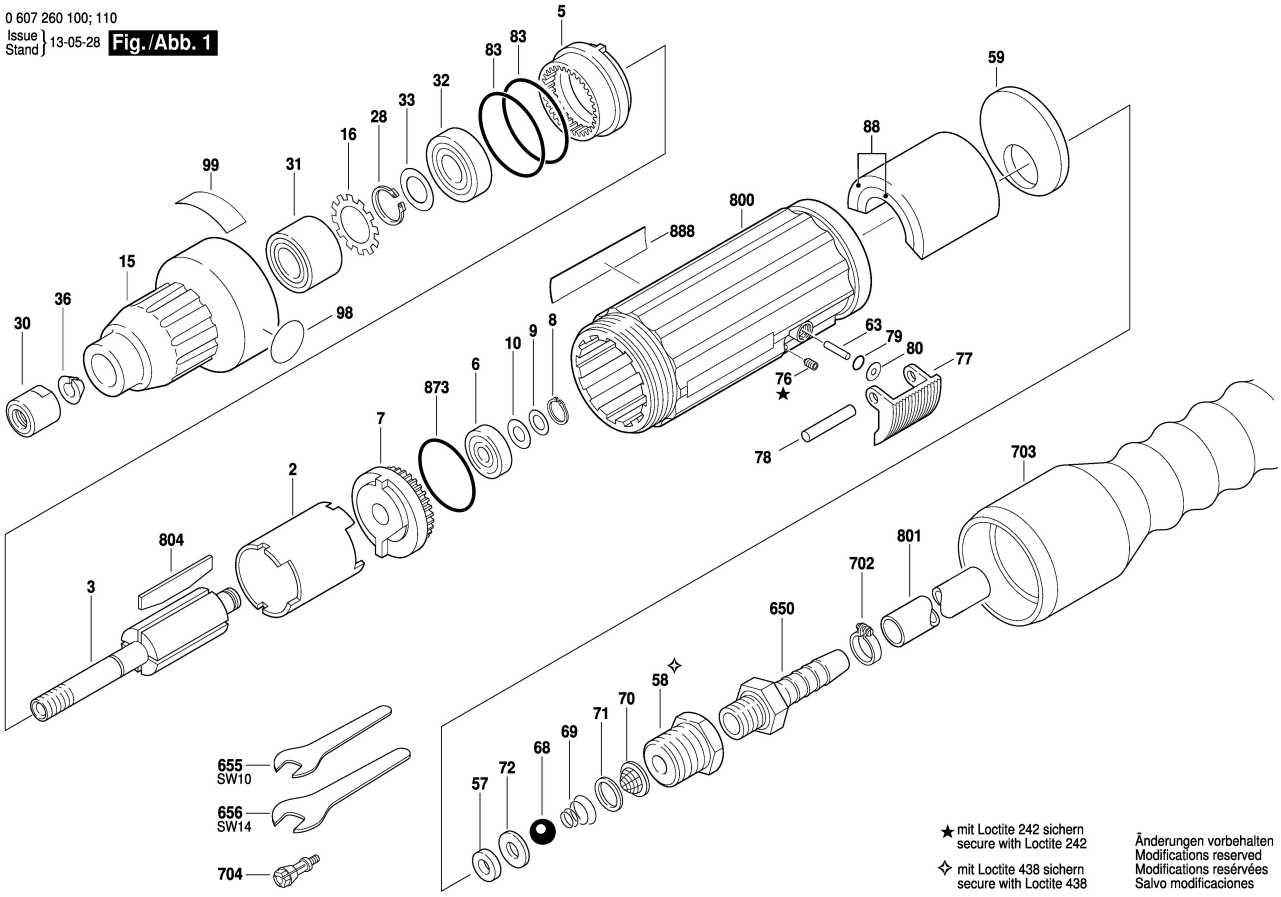0 607 260 100; 110
Issue / Stand } 13-05-28 **Fig./Abb. 1**