0 607 454 202; 203
Issue / Stand } 05-06-15
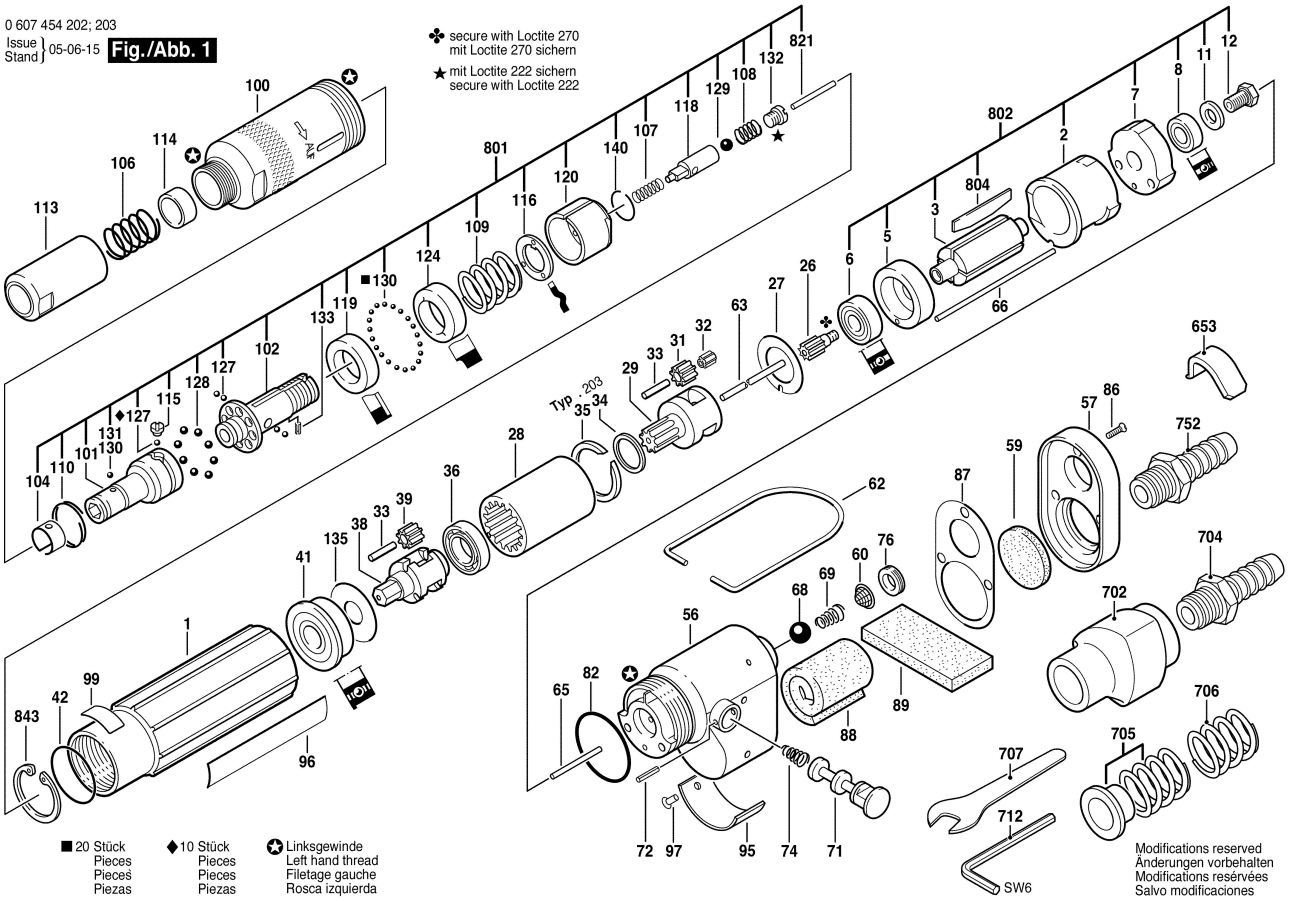
Fig./Abb. 1