0 607 454 213
Issue / Stand } 05-06-15
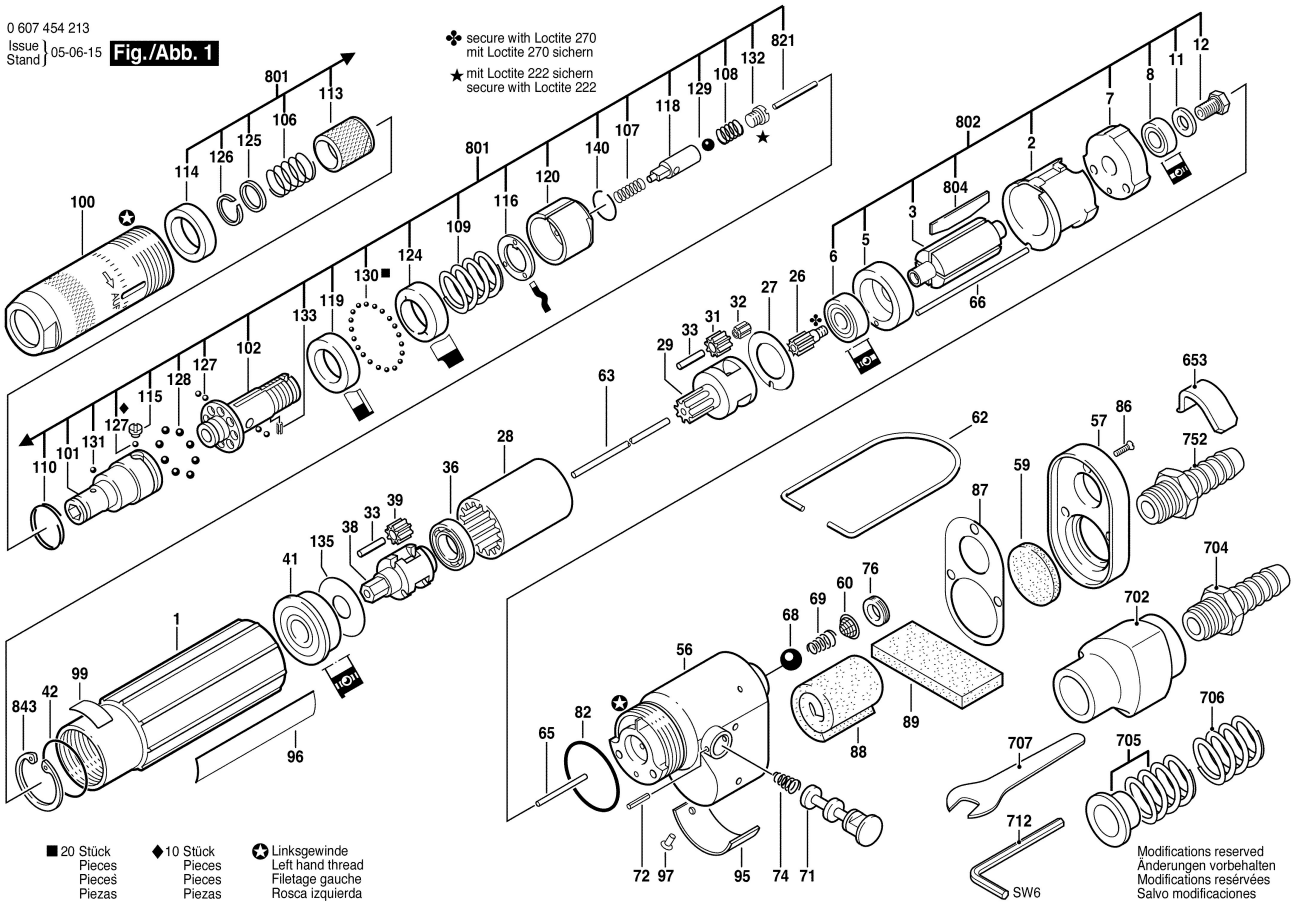
**Fig./Abb. 1**