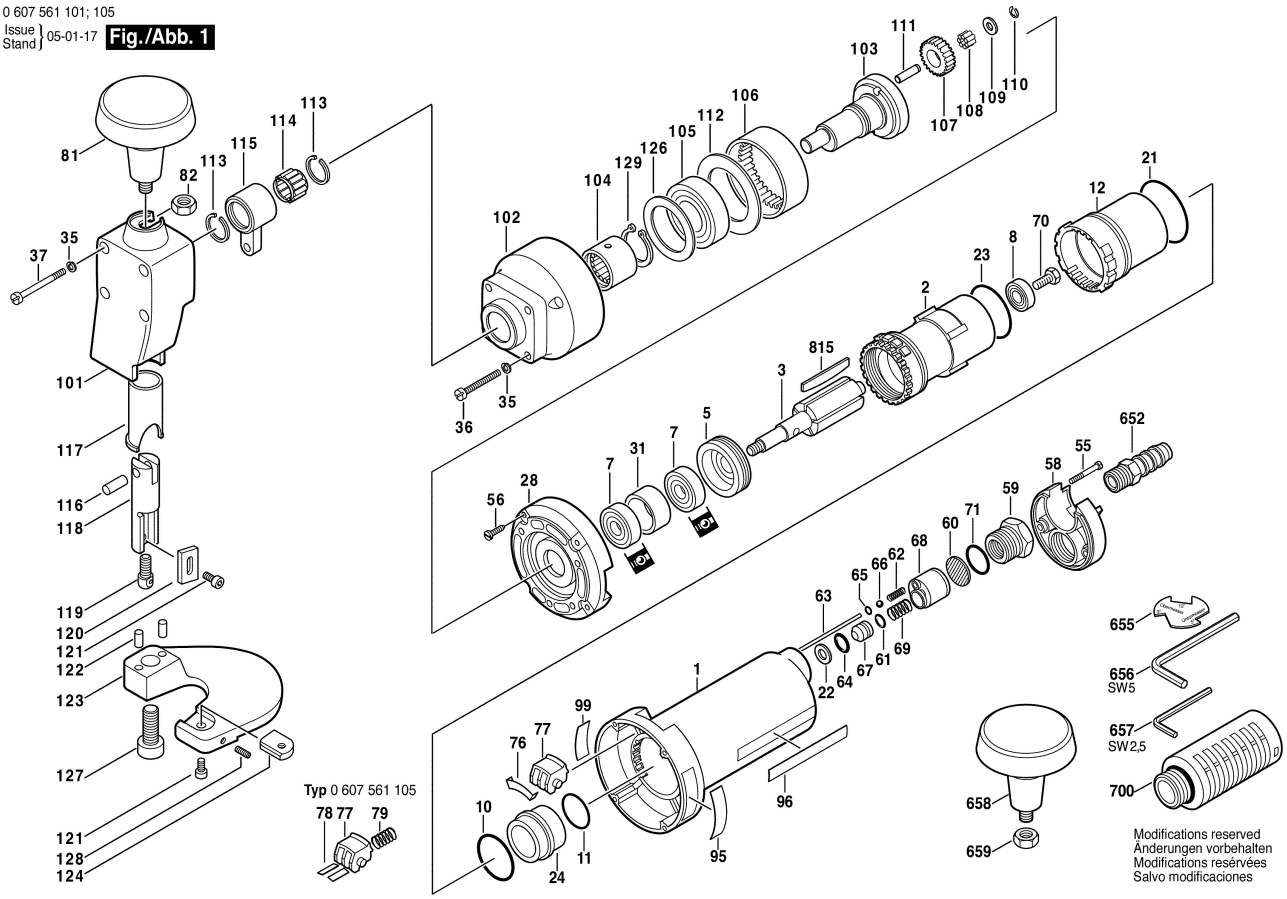0 607 561 101; 105
Issue Stand } 05-01-17 **Fig./Abb. 1**