0 607 561 113
Issue
Stand } 05-01-17
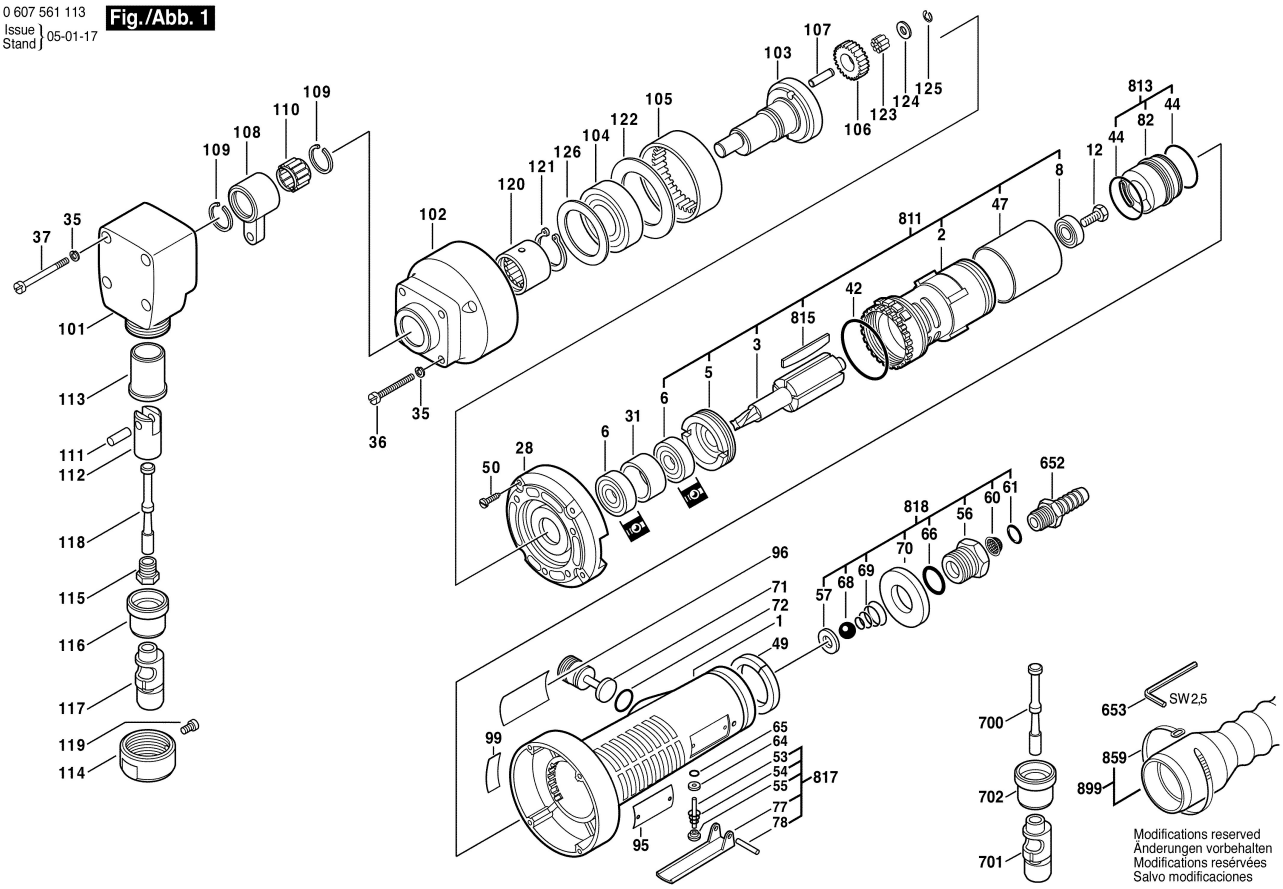
Fig./Abb. 1