0 607 952 300; 301; 303; 304

Issue / Stand 10-02-25
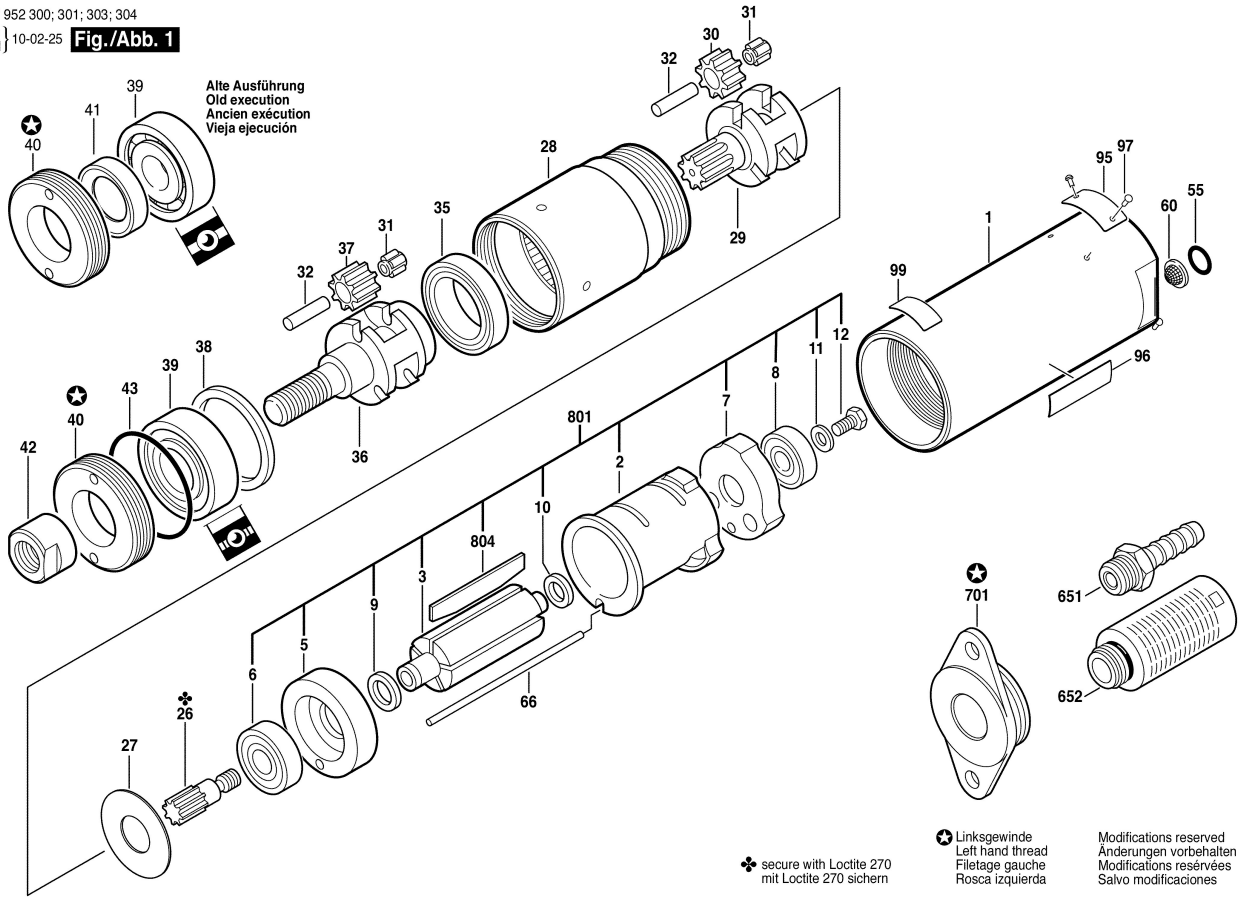
Fig./Abb. 1