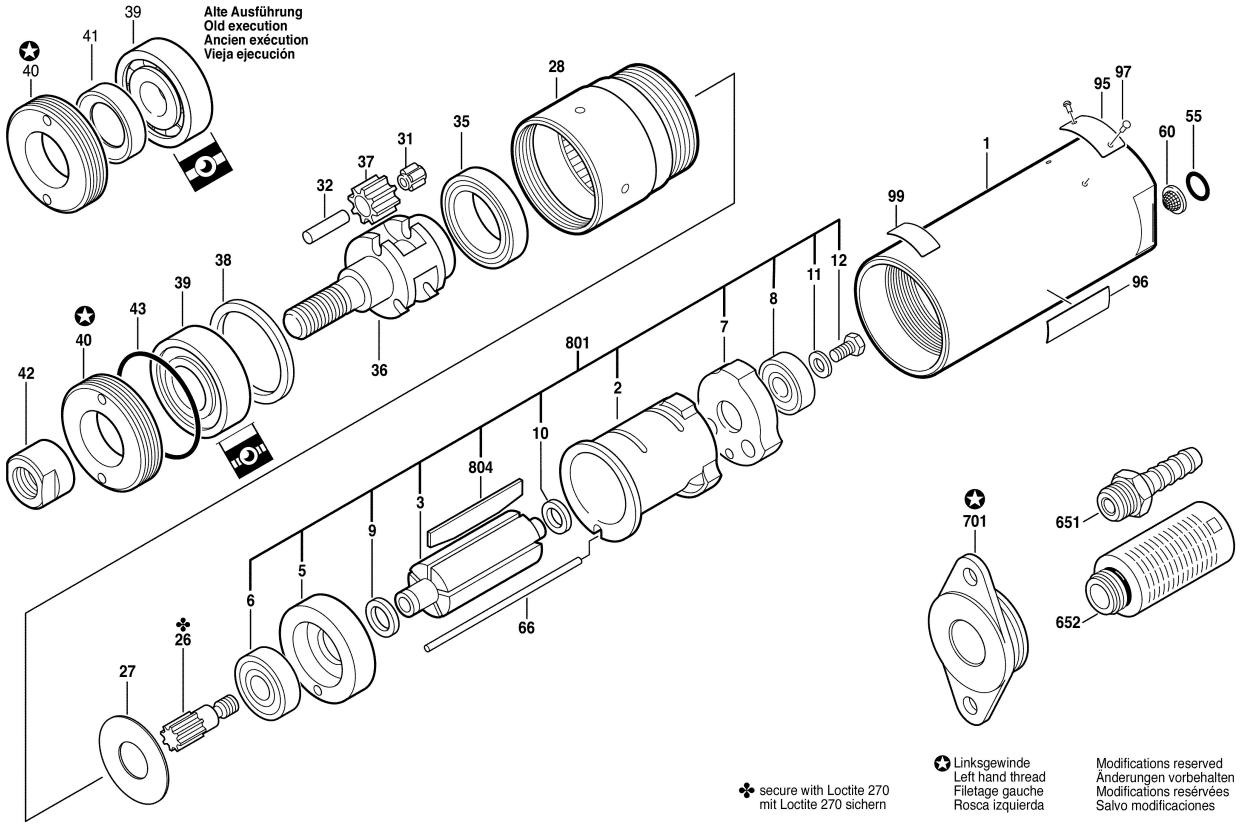0 607 952 302; 305
Issue / Stand } 10-02-25 **Fig./Abb. 1**