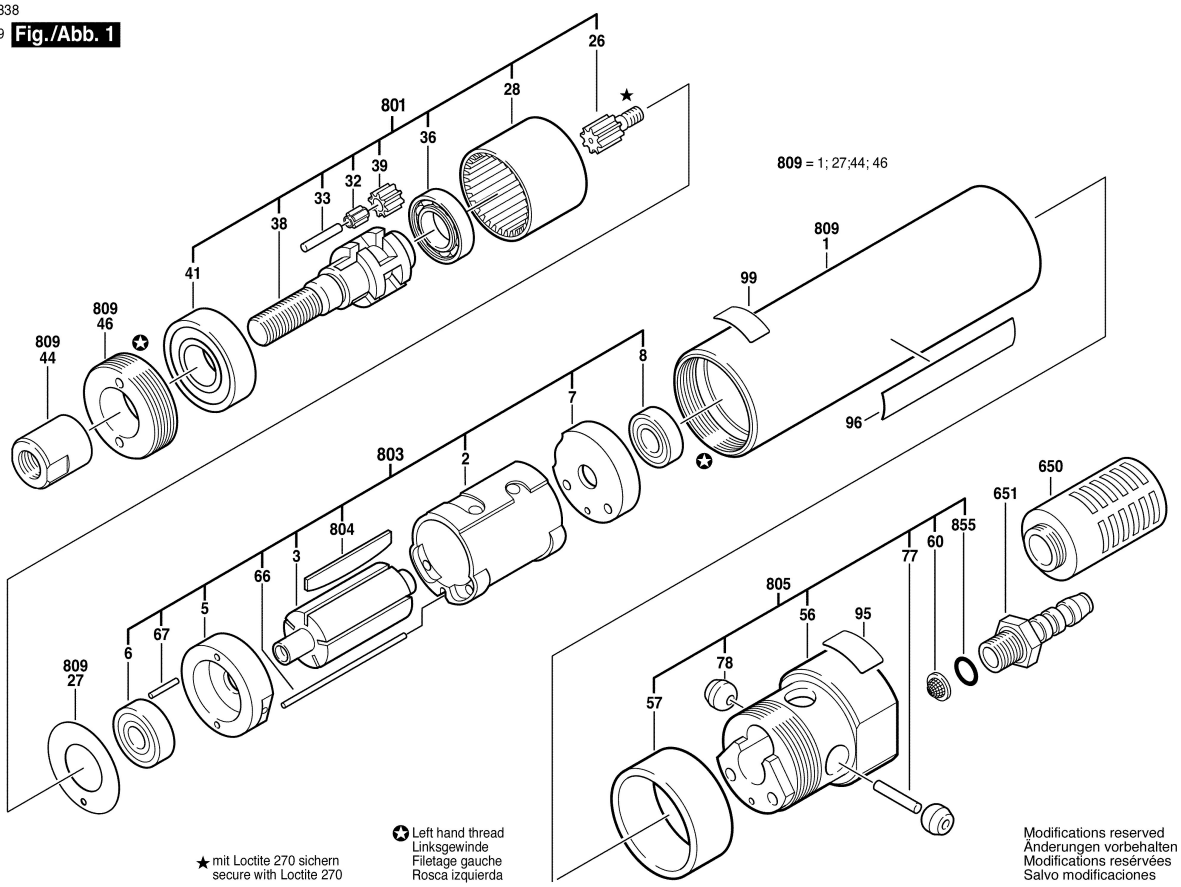0 607 953 337; 338
Issue Stand 05-04-29 **Fig./Abb. 1**