3 601 A89 900
Issue Stand 14-10-23
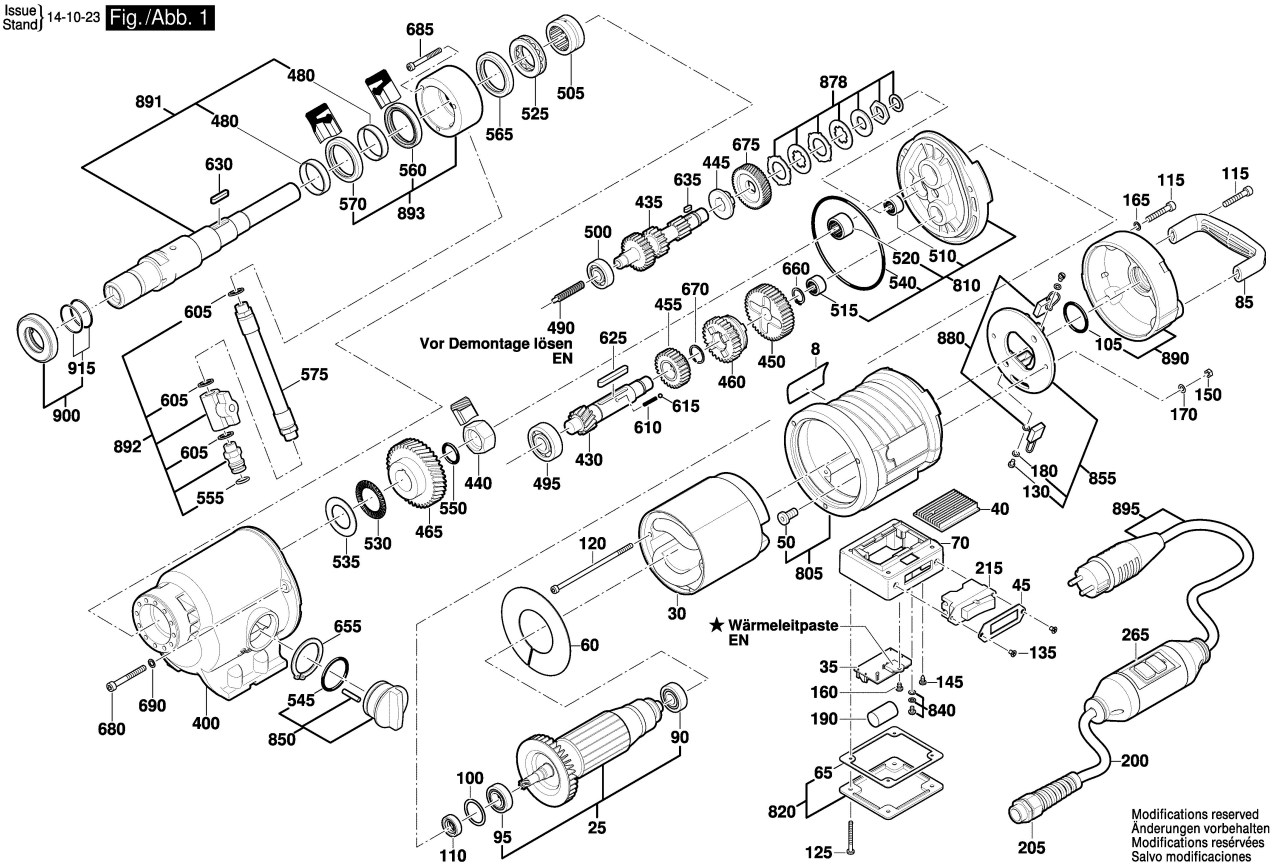
Fig./Abb. 1