3 601 F49 000
Issue } 05-11-29
Stand }

Fig./Abb. 1
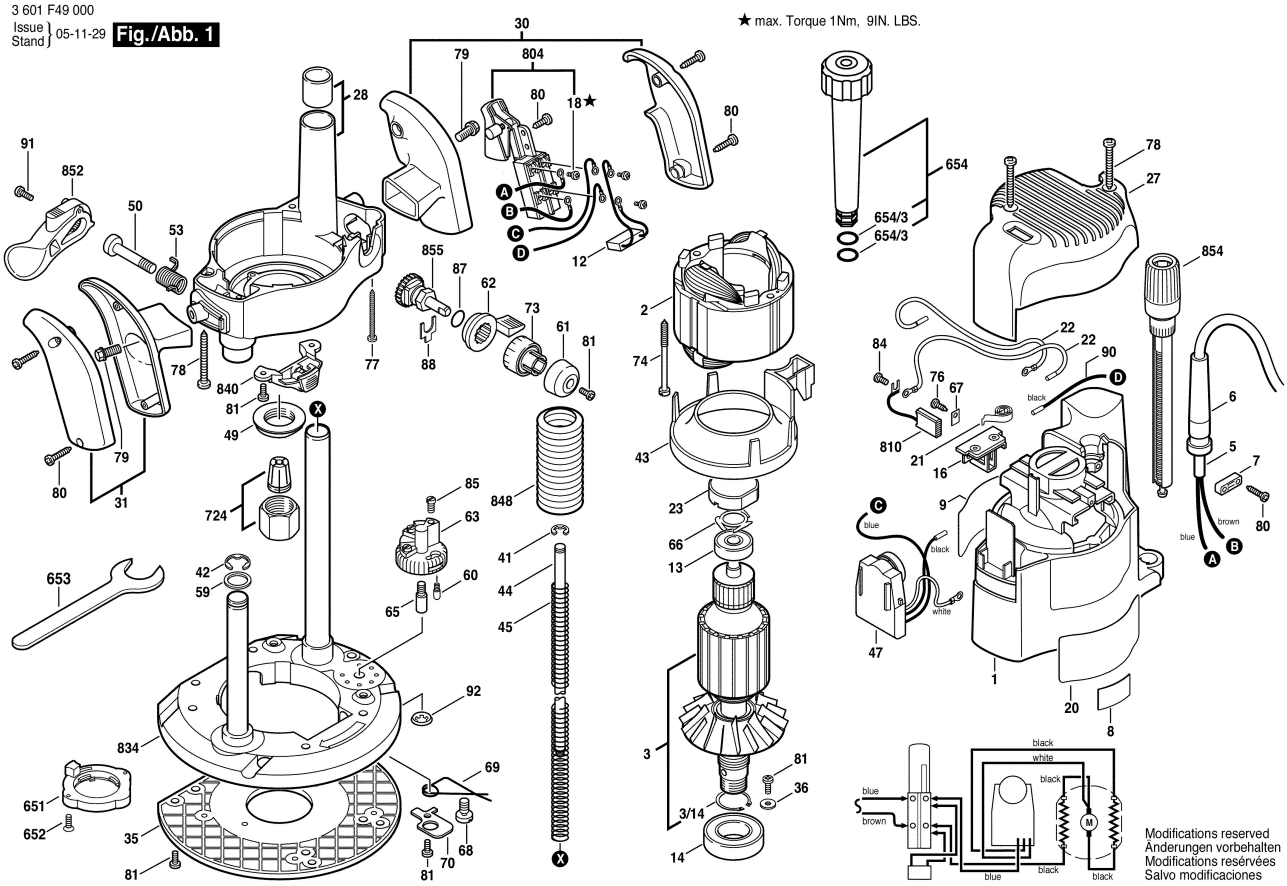
★ max. Torque 1Nm, 9IN. LBS.