3 601 F82 100
Issue
Stand } 14-09-24
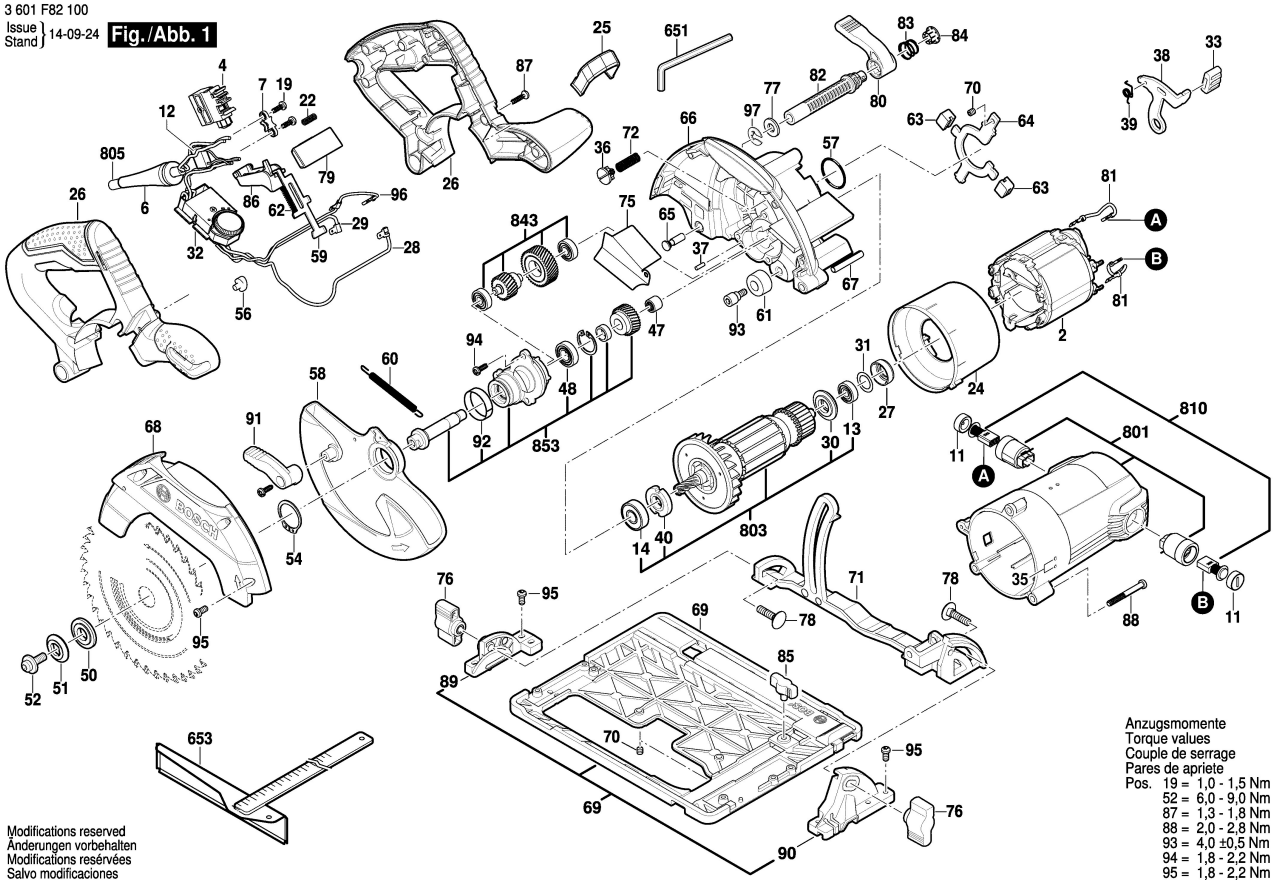
Fig./Abb. 1