3 601 J92 00C

Stand ~~08-01-11~~
Issue 08-01-15

Fig./Abb. 1

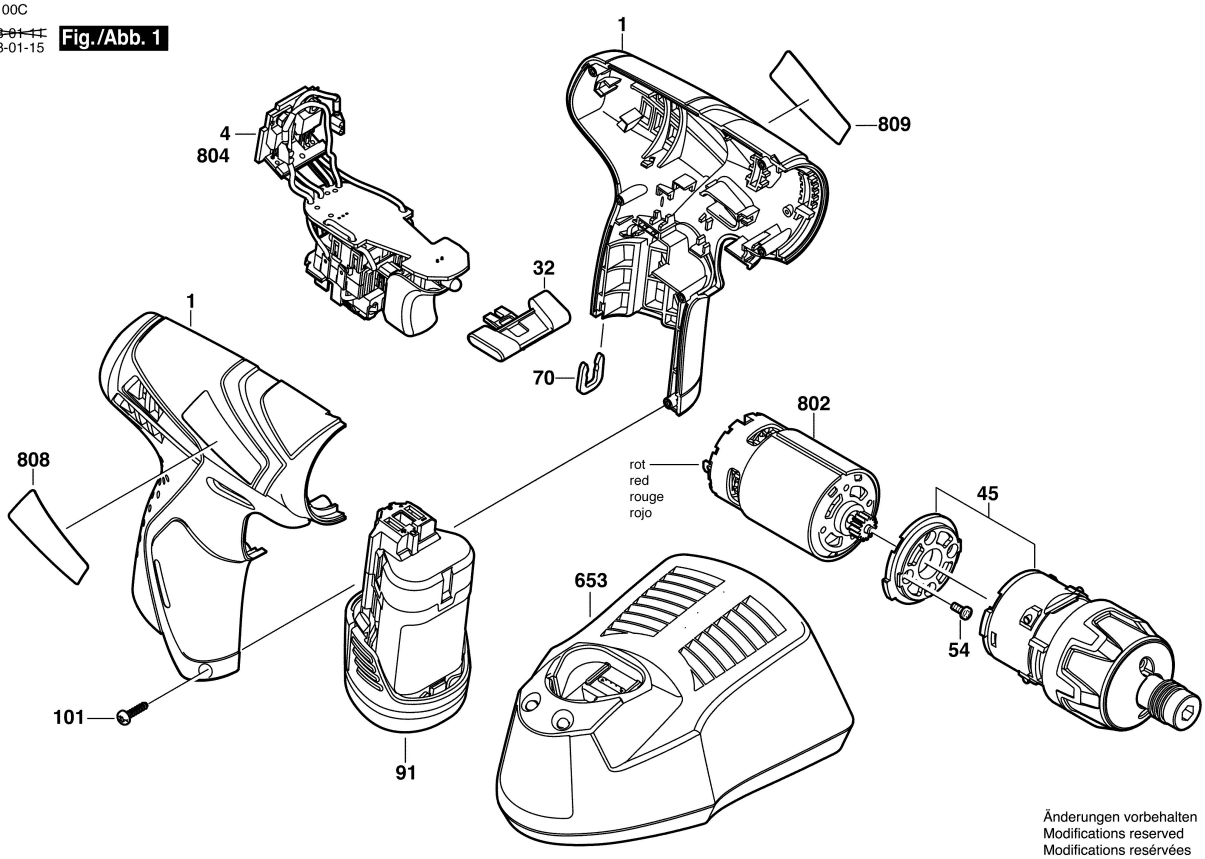

Änderungen vorbehalten
Modifications reserved
Modifications resérvées
Salvo modificaciones