3 601 JE2 080
Stand / Issue } 14-01-20
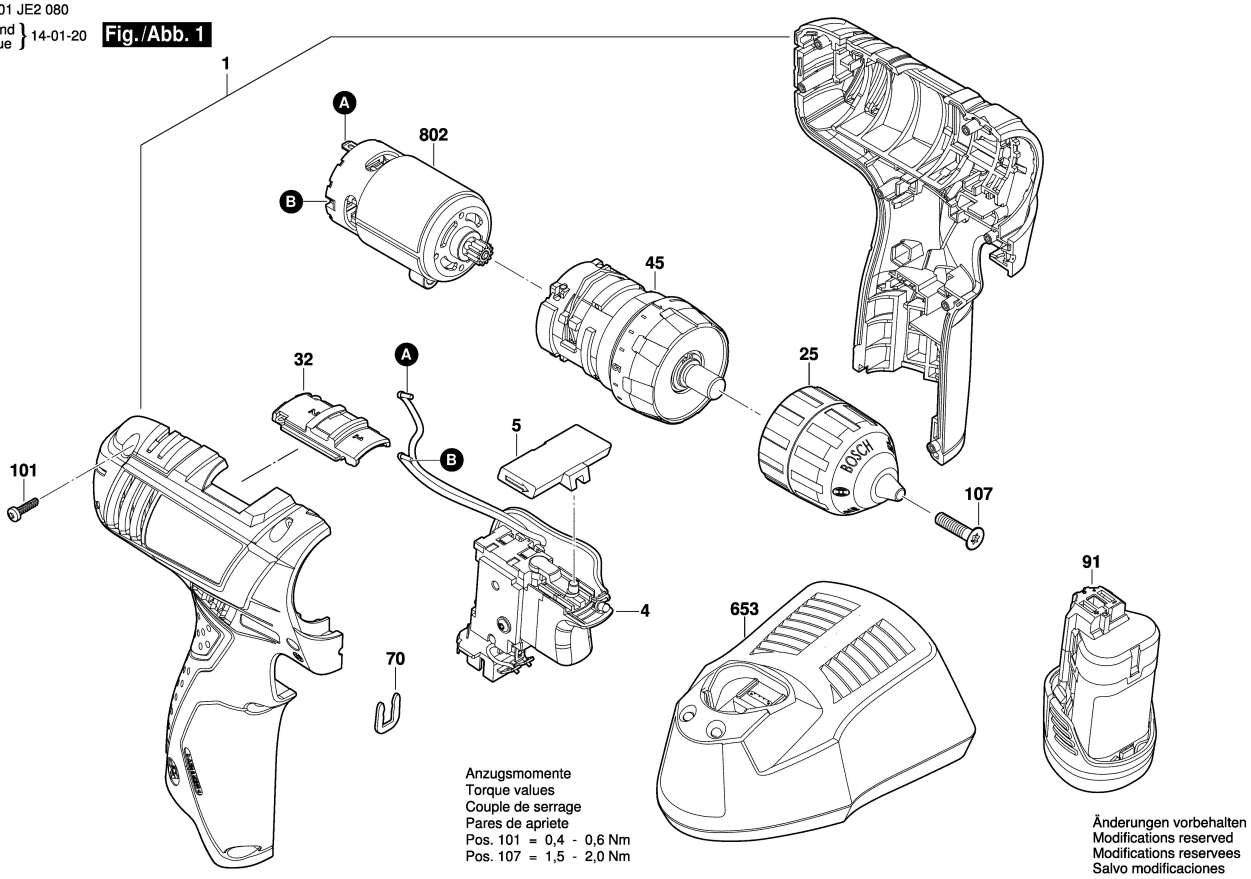
Fig./Abb. 1