F 013 027 503
Stand
Issue } 00-12-28
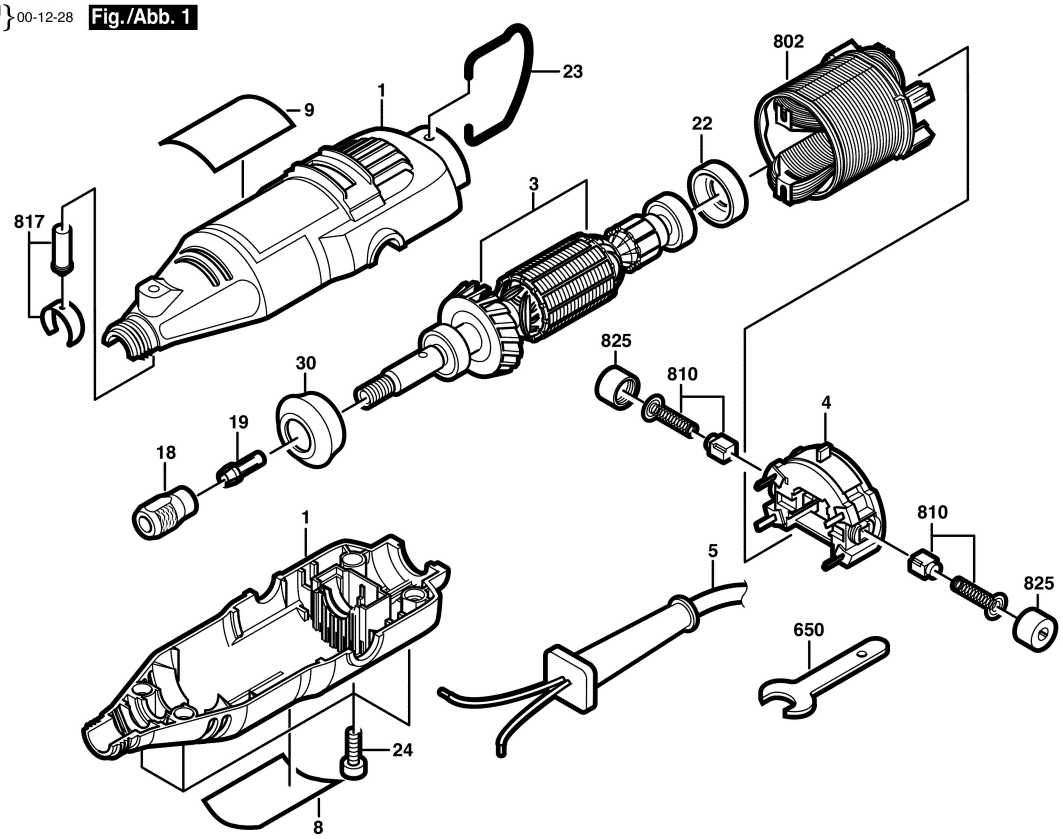
Fig./Abb. 1