F 013 030 045
Stand / Issue } 05-04-14
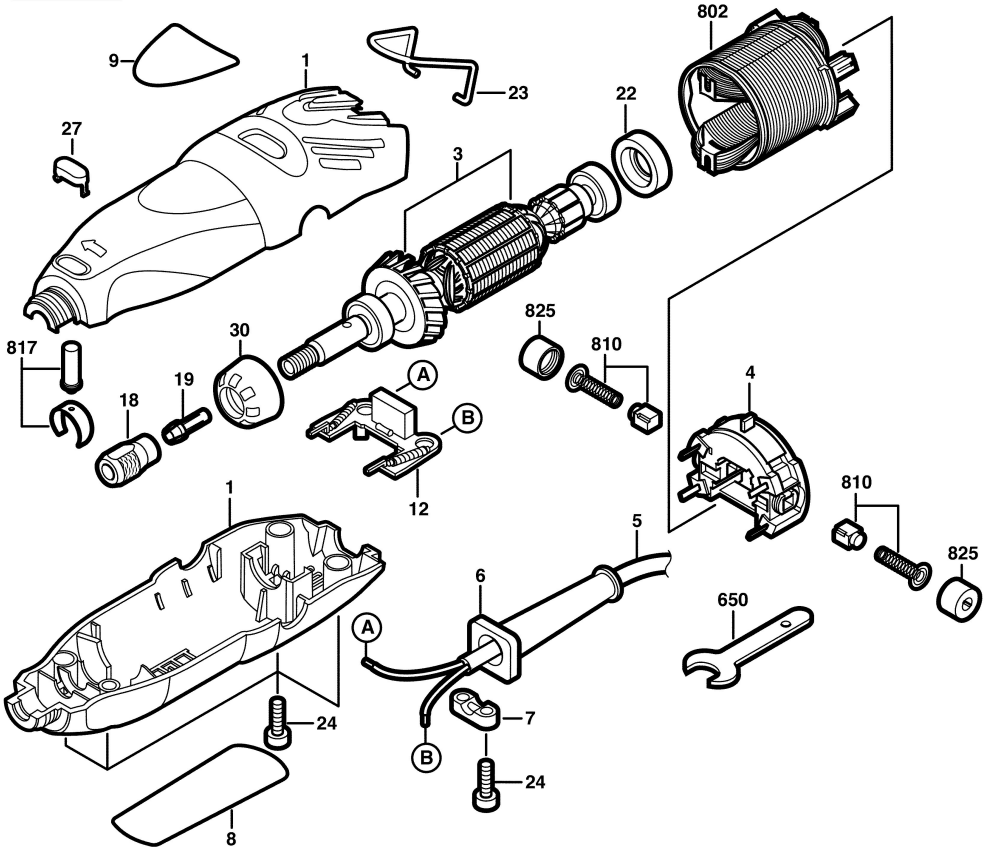
Fig./Abb. 1