F 013 137 100

Stand } ~~98-09~~
Issue } 99-01-22
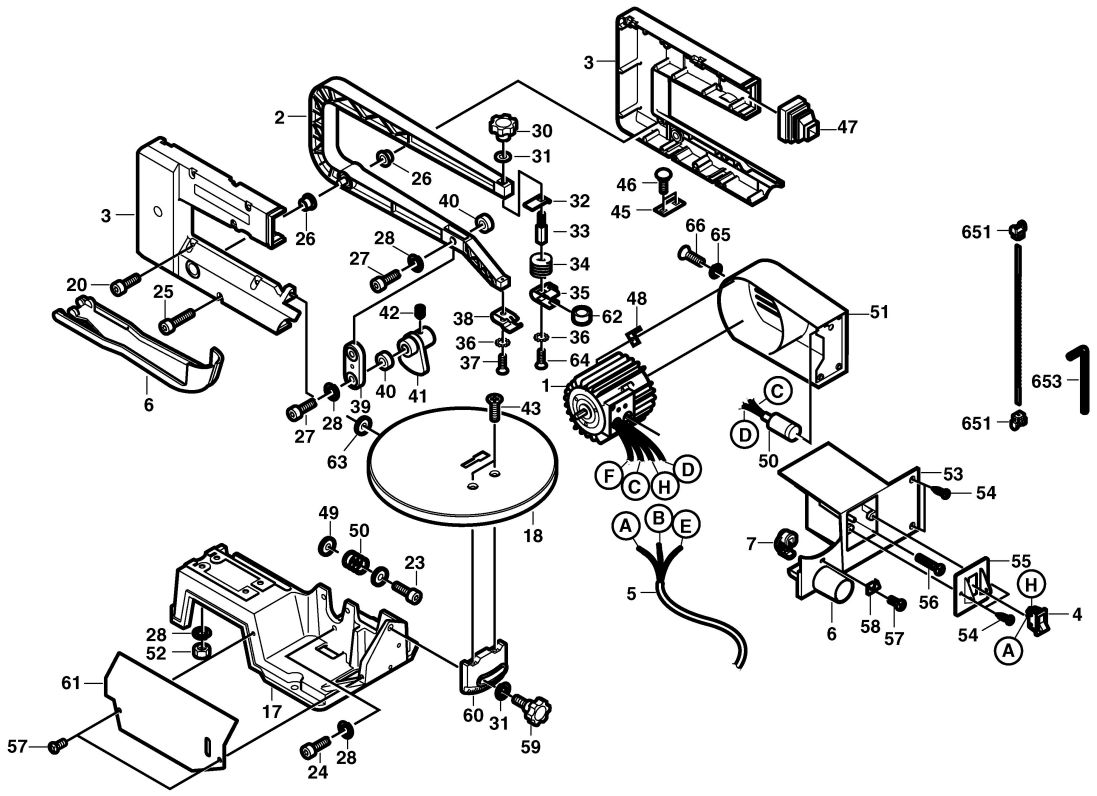
Fig./Abb. 1