F 013 167 200

Stand ~~98-09~~
Issue 99-01-99
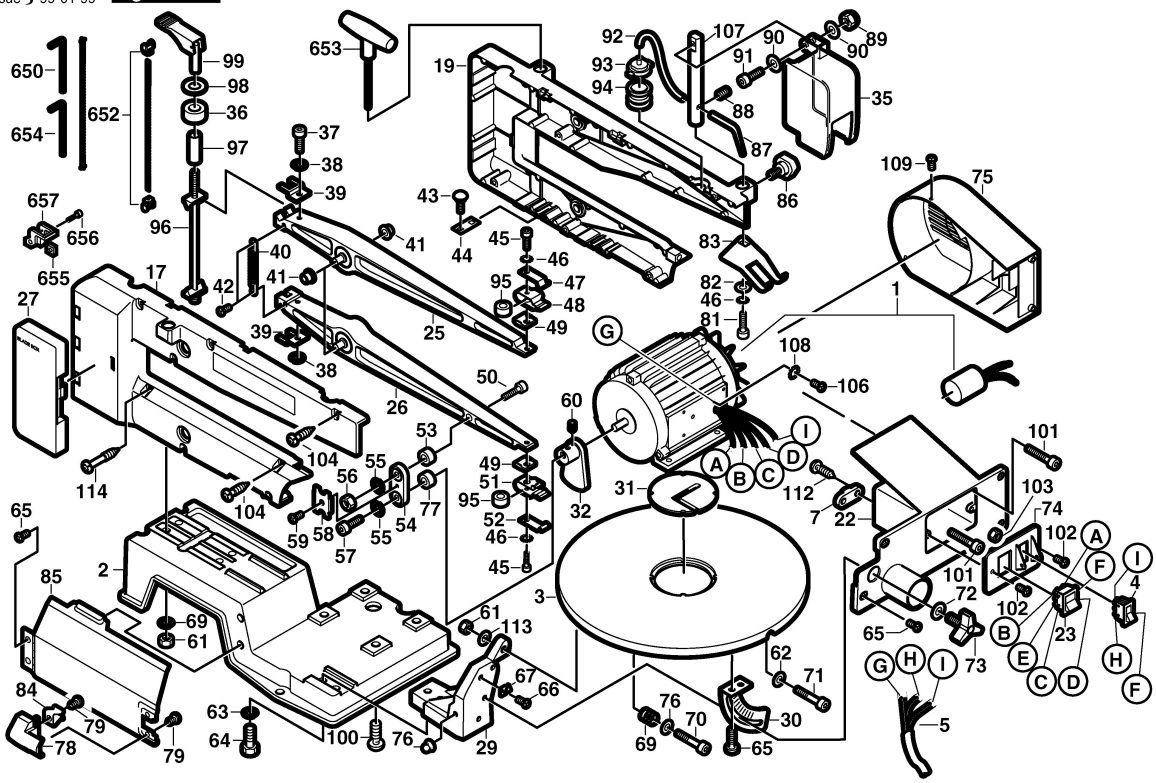
Fig./Abb. 1