F 015 490 001
Stand ~~07-11~~
Issue 11-01-31
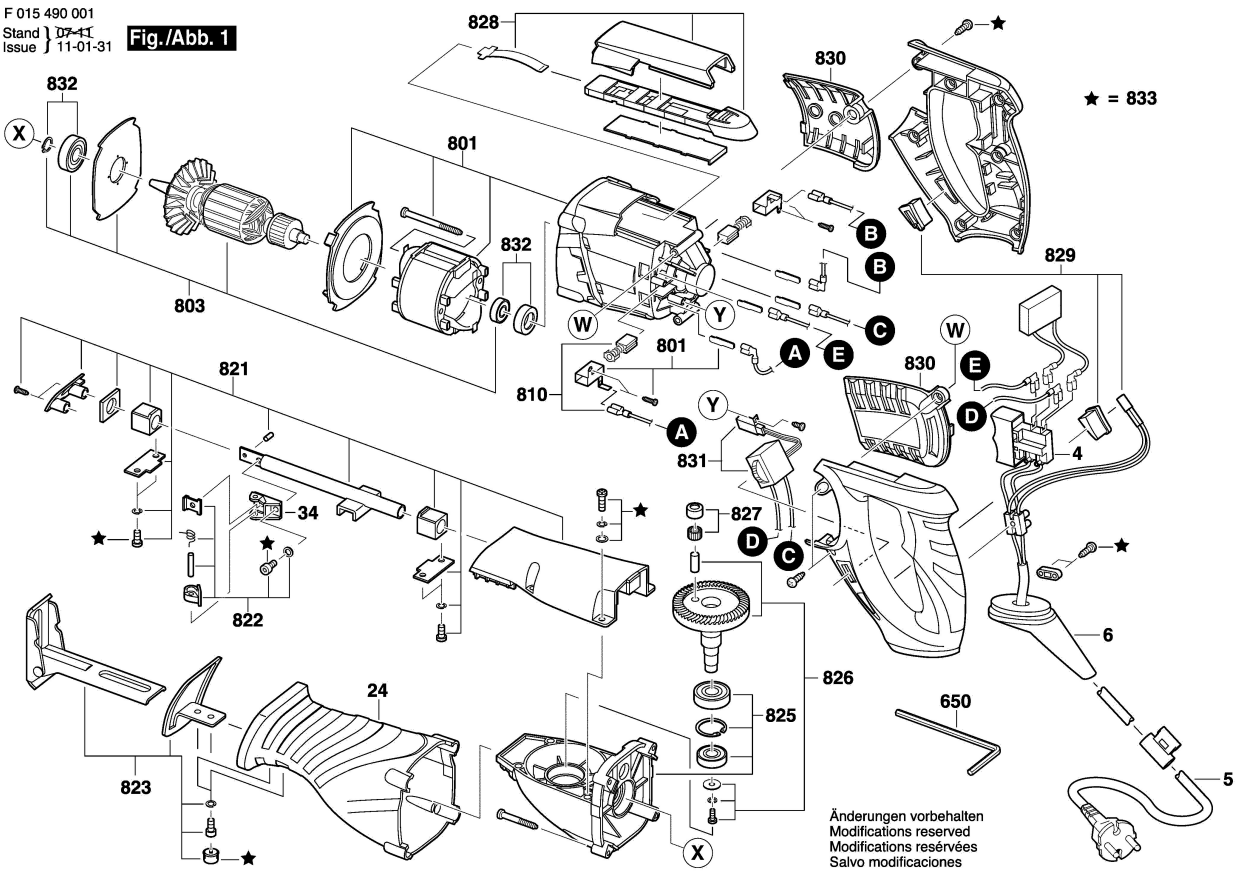
Fig./Abb. 1