F 015 900 401

Stand ~~05-07-19~~
Issue 05-07-20
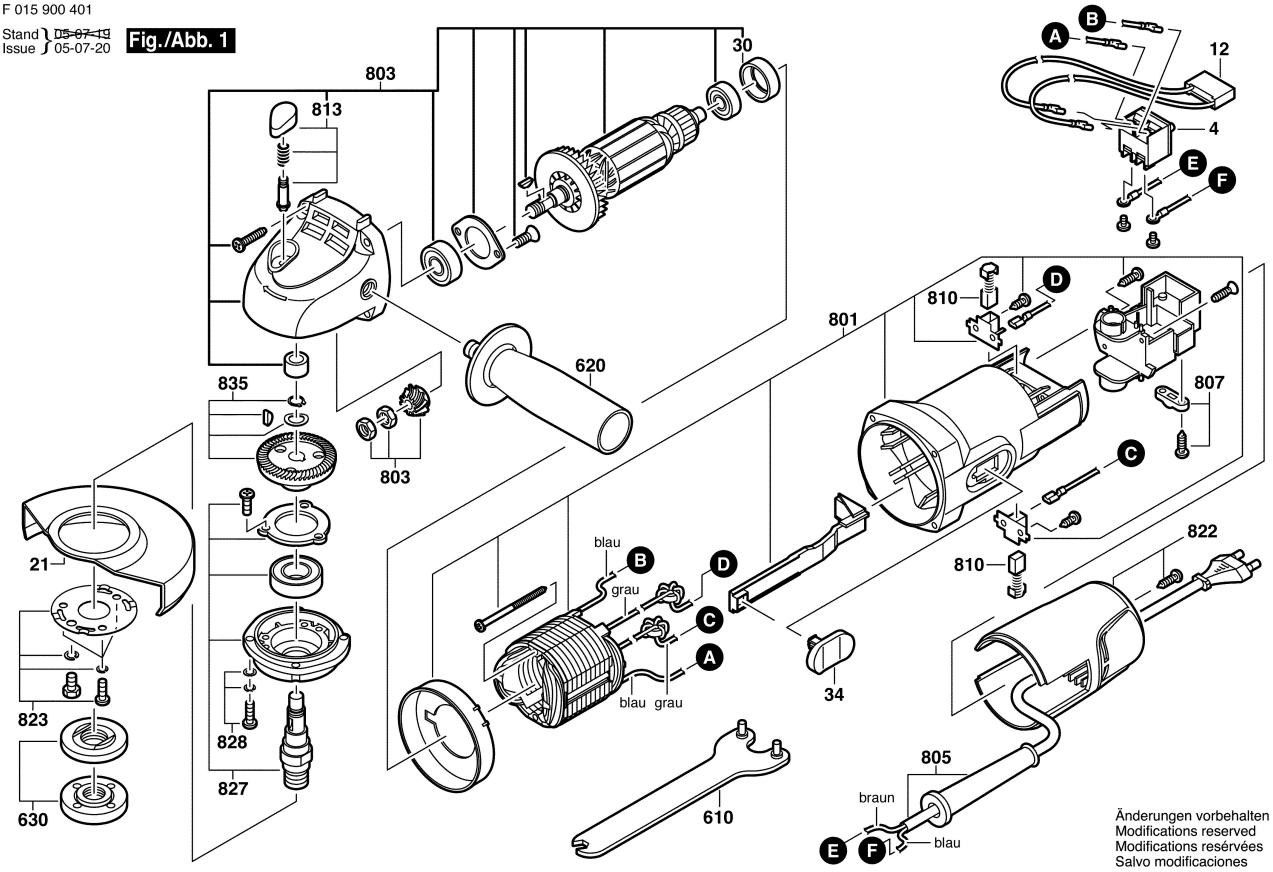
Fig./Abb. 1