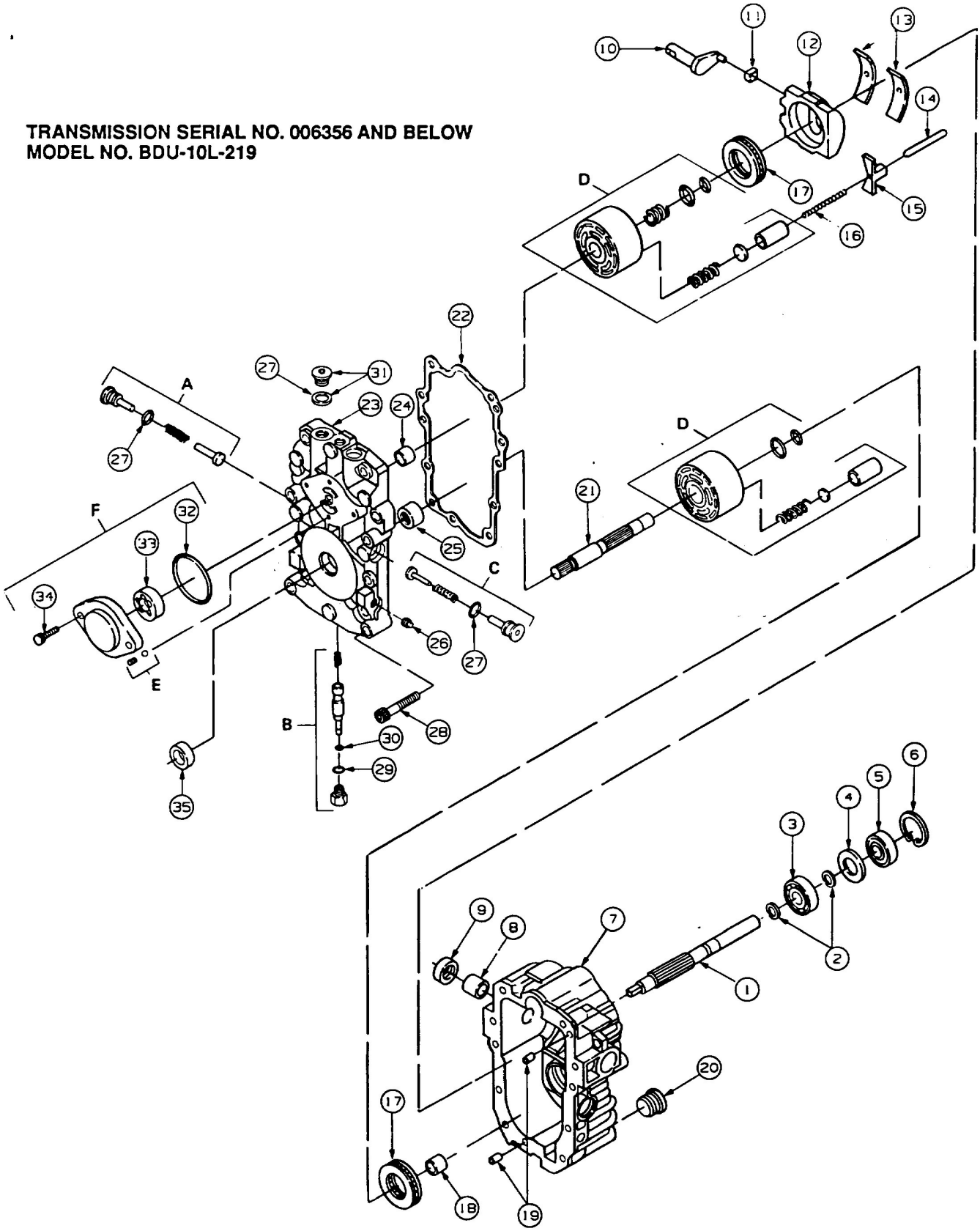TRANSMISSION SERIAL NO. 006356 AND BELOW
MODEL NO. BDU-10L-219