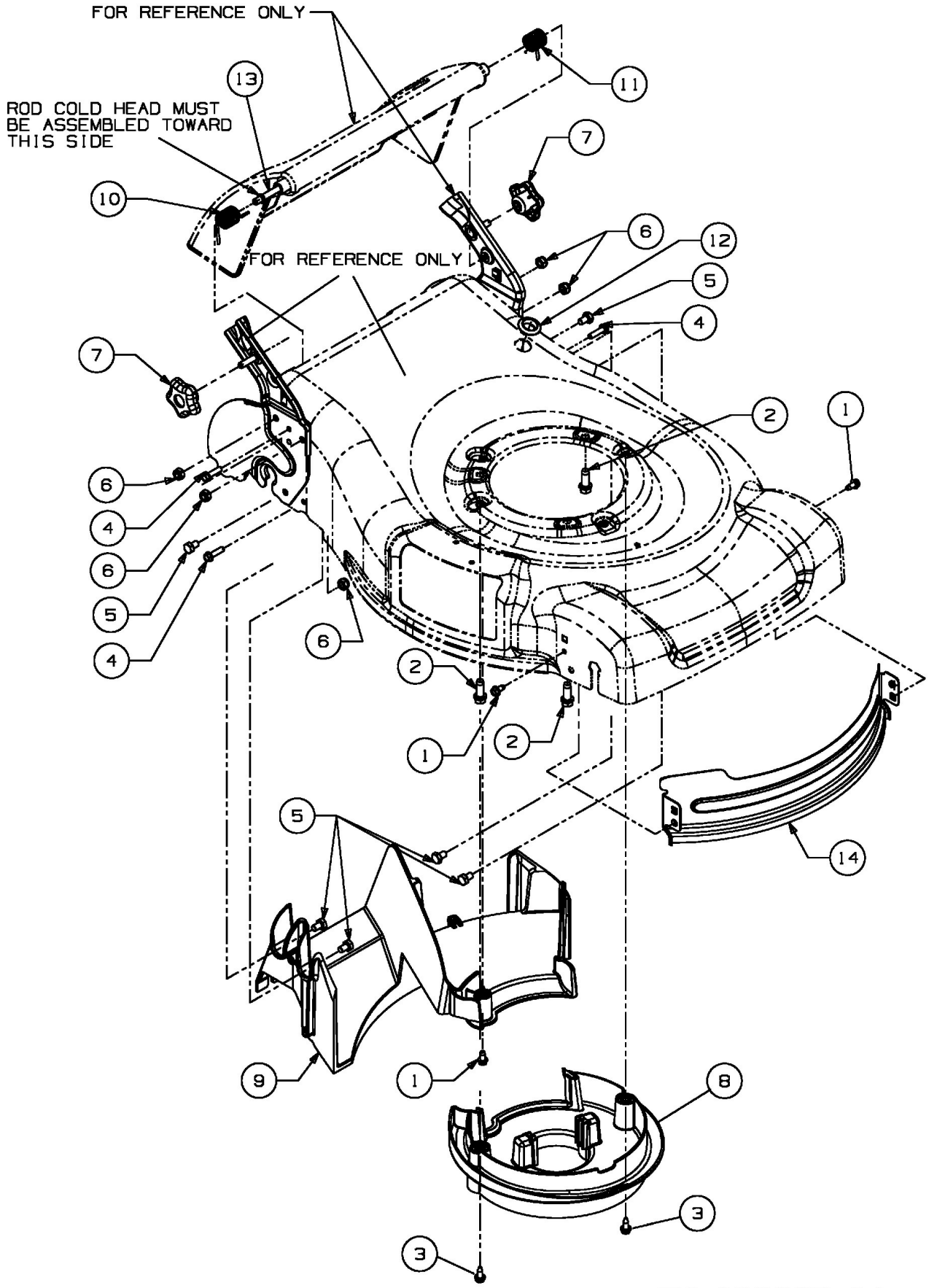
FOR REFERENCE ONLY
ROD COLD HEAD MUST BE ASSEMBLED TOWARD THIS SIDE
FOR REFERENCE ONLY
13
11
7
10
6
12
5
4
7
2
1
6
4
6
5
4
6
2
1
2
5
14
9
1
8
3
3

E3-03326B-01