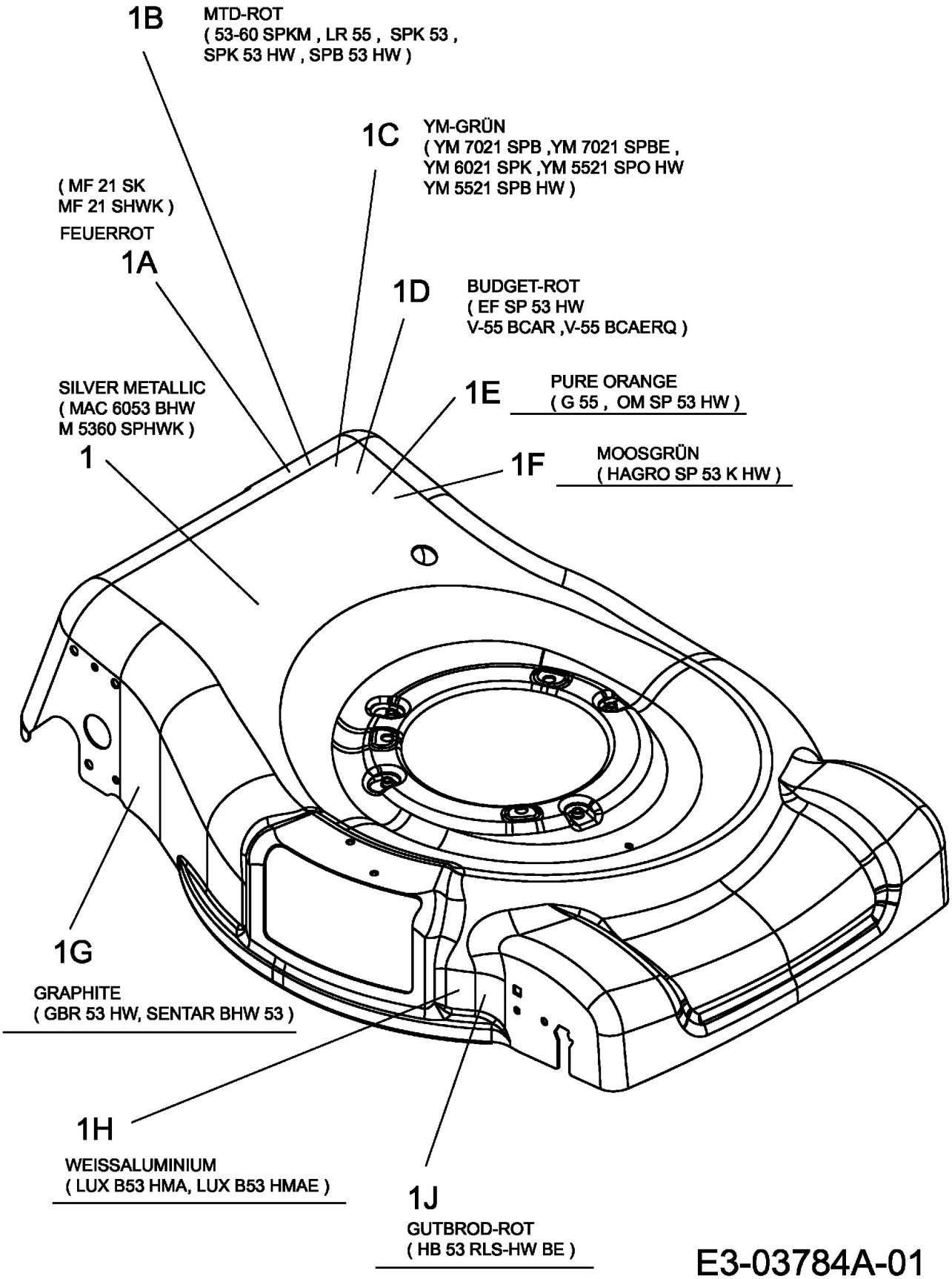
1B
MTD-ROT
(53-60 SPKM , LR 55 , SPK 53 ,
SPK 53 HW , SPB 53 HW)
1C
YM-GRÜN
(YM 7021 SPB ,YM 7021 SPBE ,
YM 6021 SPK ,YM 5521 SPO HW
YM 5521 SPB HW)
(MF 21 SK
MF 21 SHWK)
FEUERROT
1A
1D
BUDGET-ROT
(EF SP 53 HW
V-55 BCAR ,V-55 BCAERQ)
SILVER METALLIC
(MAC 6053 BHW
M 5360 SPHWK)
1
1E
PURE ORANGE
(G 55 , OM SP 53 HW)
1F
MOOSGRÜN
(HAGRO SP 53 K HW)
1G
GRAPHITE
(GBR 53 HW, SENTAR BHW 53)
1H
WEISSALUMINIUM
(LUX B53 HMA, LUX B53 HMAE)
1J
GUTBROD-ROT
(HB 53 RLS-HW BE)

E3-03784A-01