0 600 831 060

Stand / Issue 99-05-31
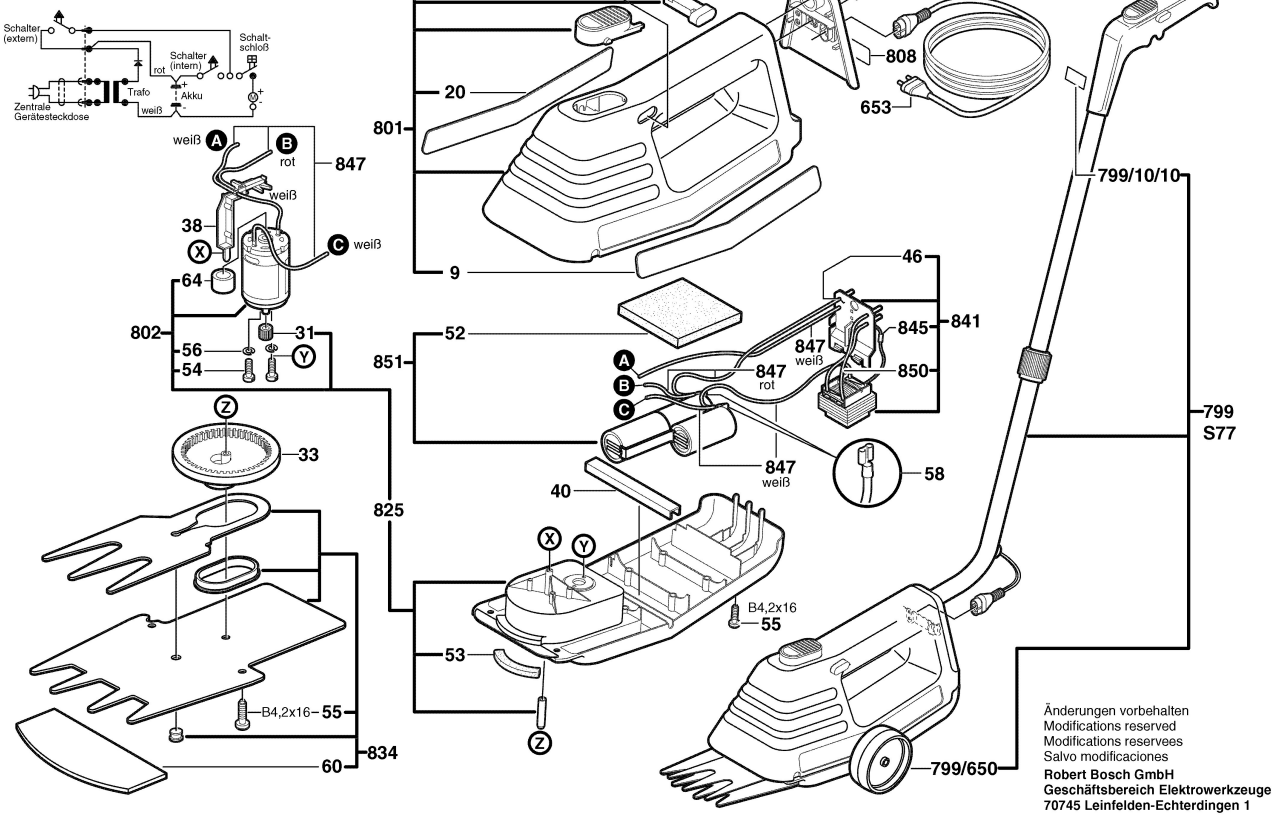
Fig./Abb. 1