0 601 552 003

Stand } ~~01-03-05~~
Issue } 01-03-14
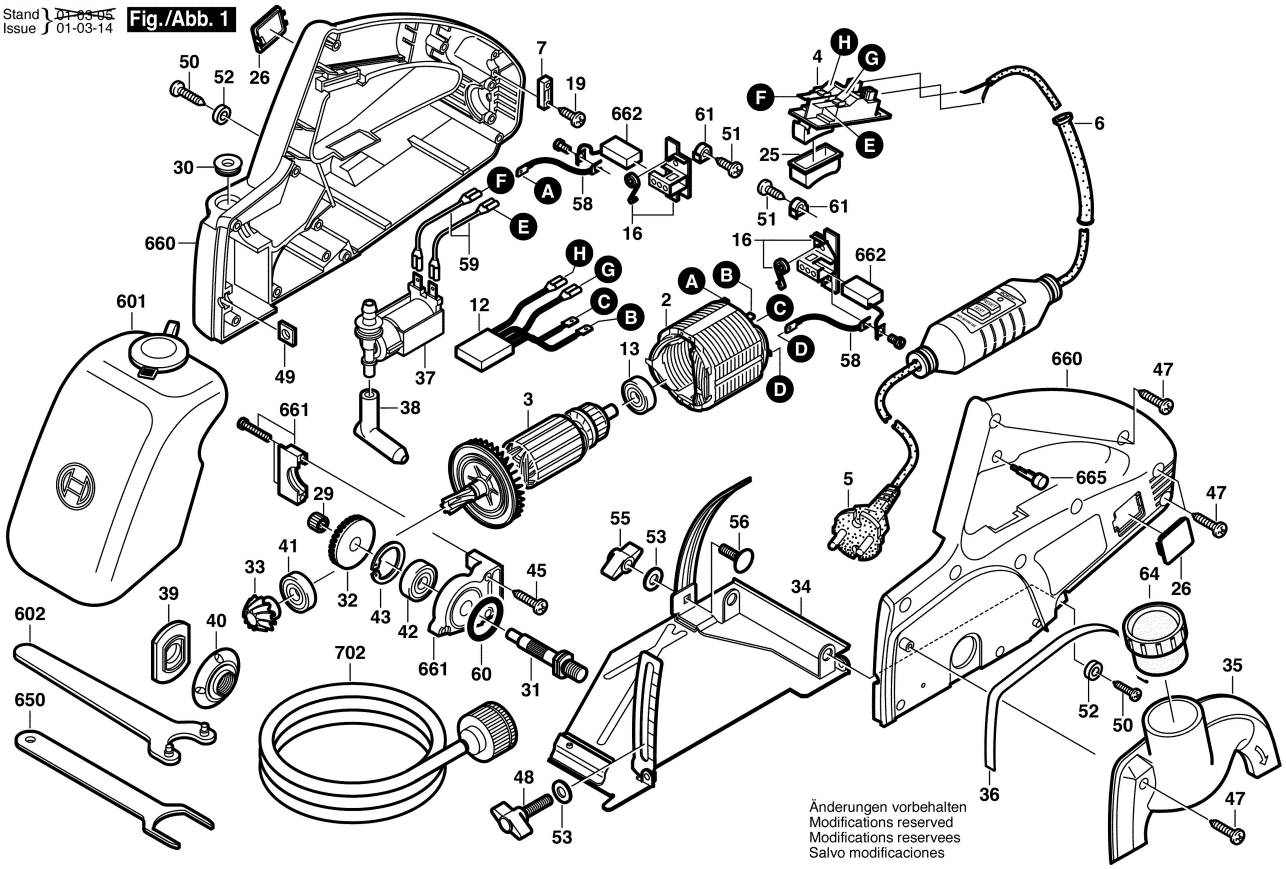
Fig./Abb. 1