0 601 594 005
Stand } ~~D2-06~~
Issue } 09-10-22
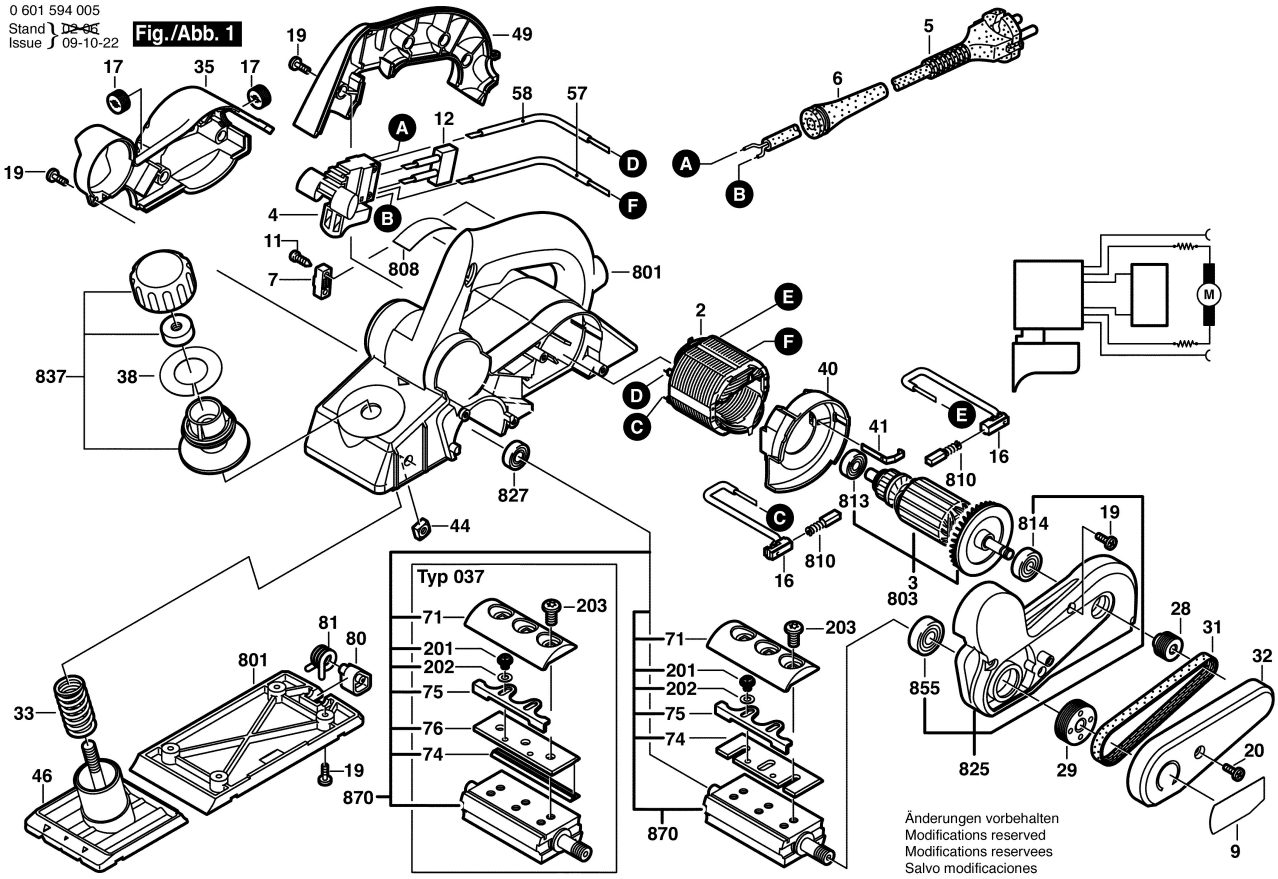
Fig./Abb. 1