0601 937 703

Stand ~~98-02~~
Issue 00-01-15
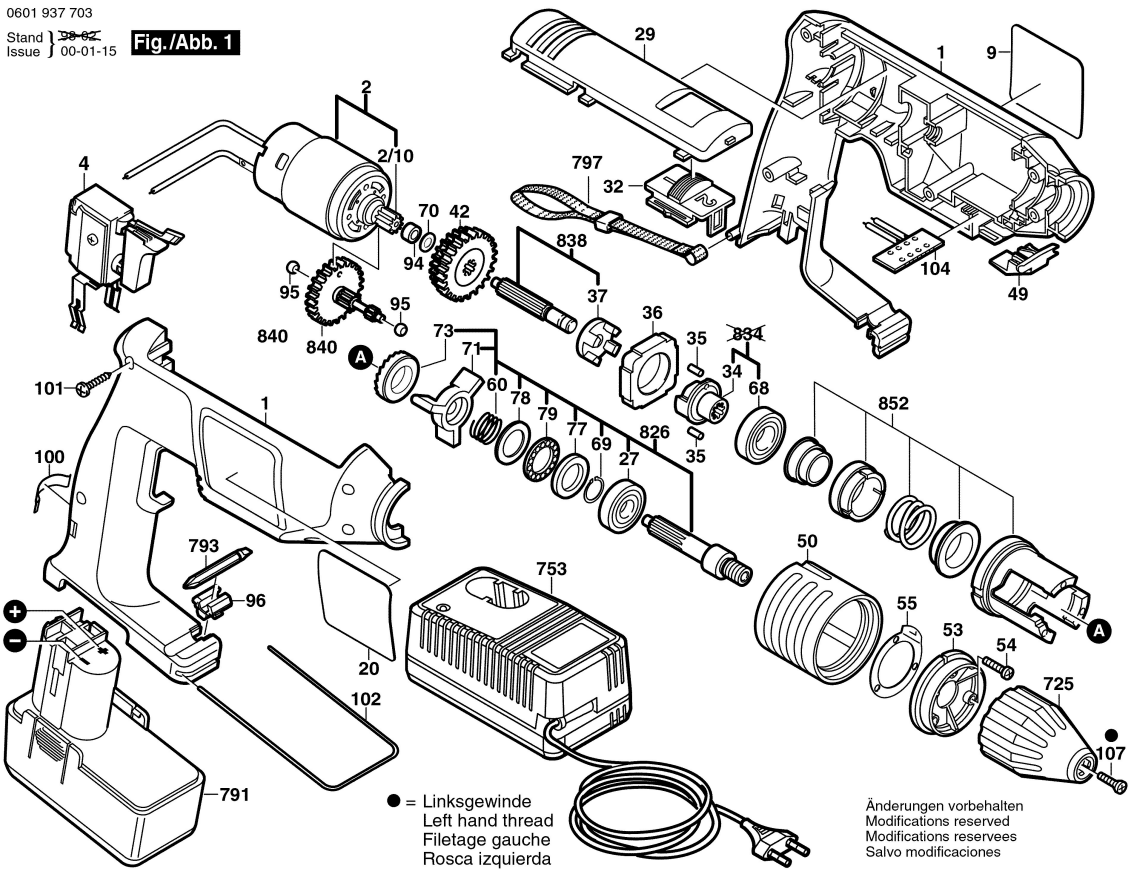
Fig./Abb. 1